FIRST ANGLE PROJECTION

(ALL DIMENSIONS ARE IN mm)

DRG. NO. 0 203 02 107 01

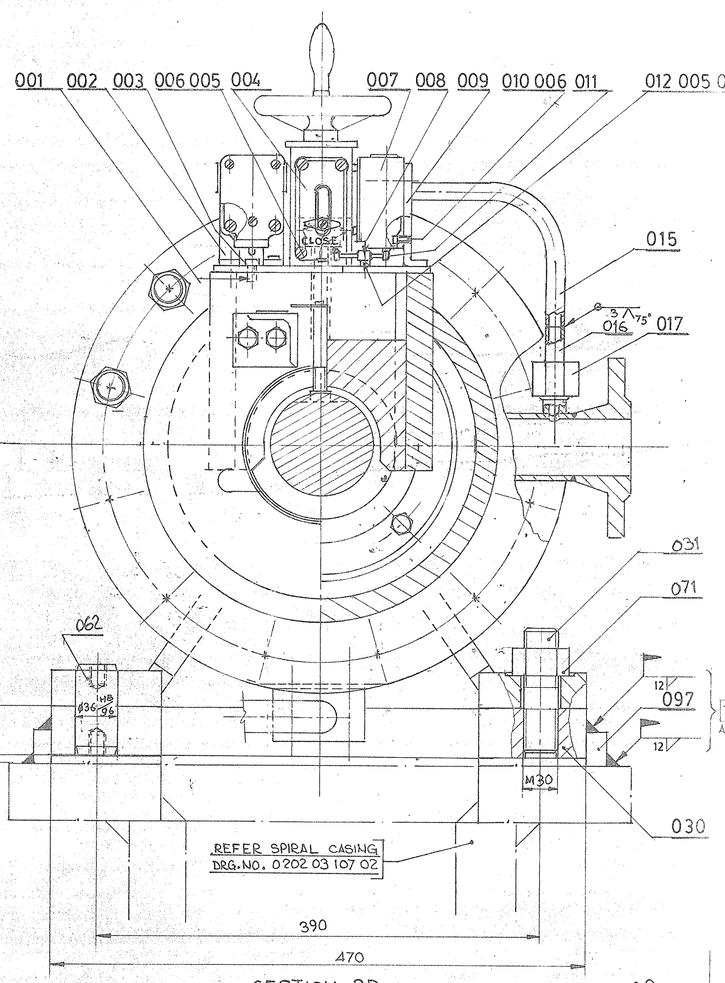


SECTION-BB

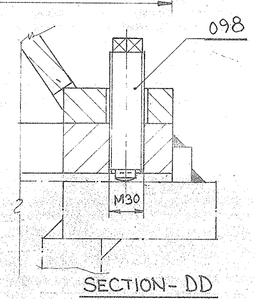


SECTION- DD

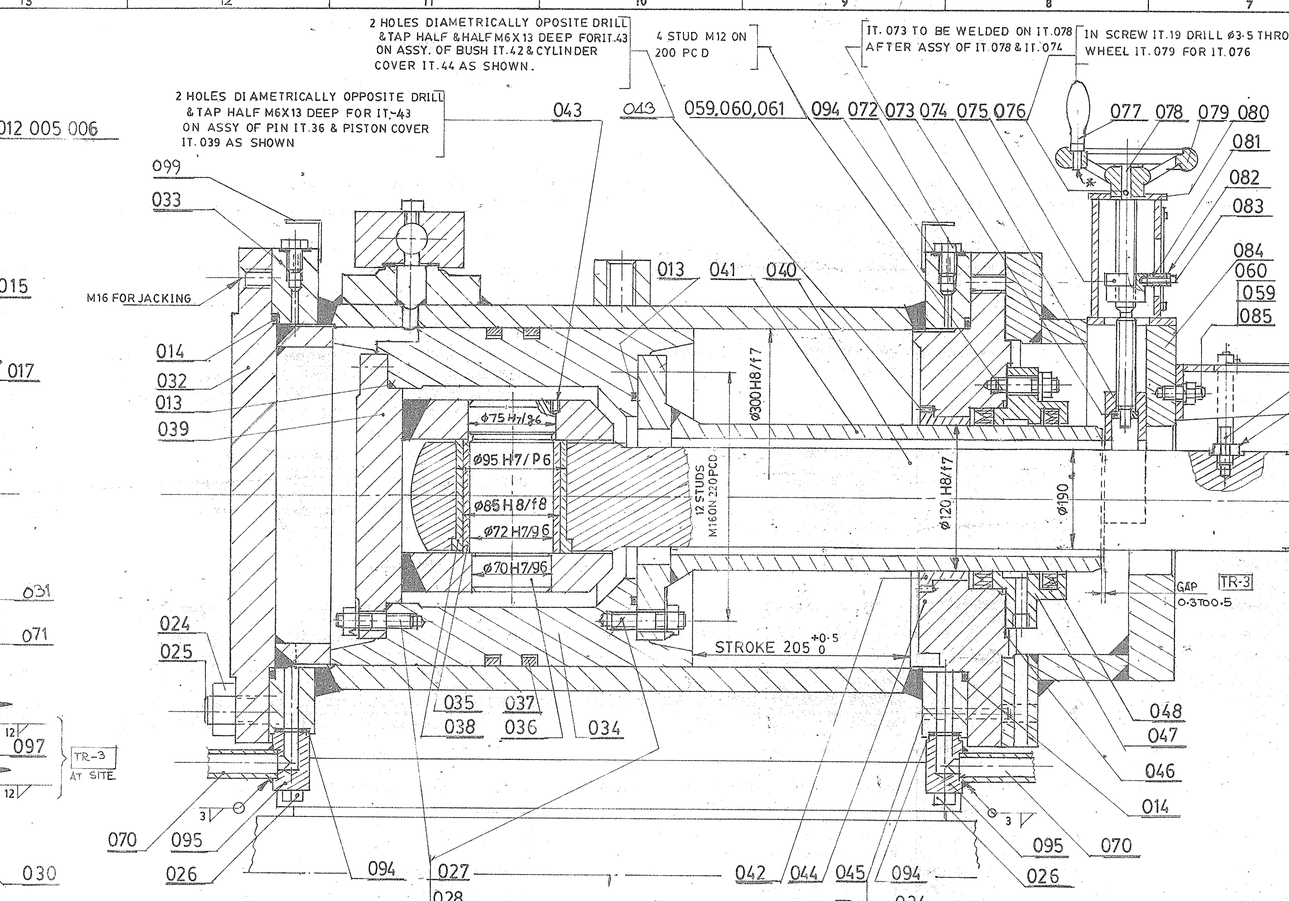


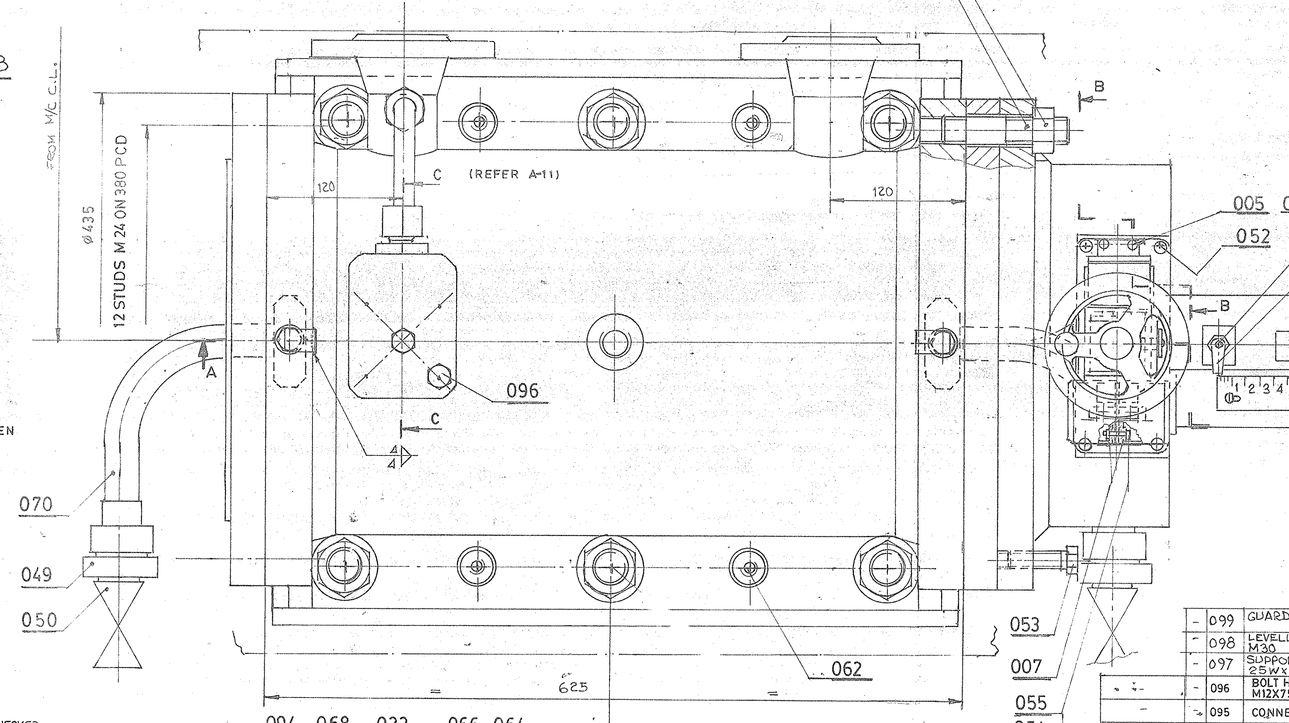


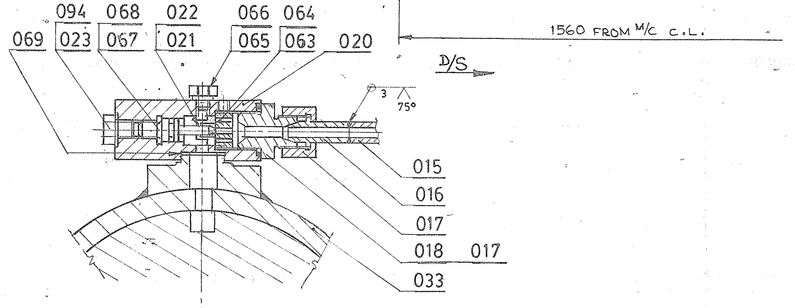


SECTION-CC
ZONE:- G-11

## TECHNICAL REQUIREMENTS :-

1. DURING ASSY OF PISTON IT.034 WITH PISTON ROD, BUSH IT.038 TO BE LUBRICATED PROFUSELY.
2. ENSURE DURING THE ASSY. THAT THE CYLINDER PORT & SLOT IN THE PISTON CO-INCIDE. MATCH MARK THE SLEEVE IT. 041 SEAL COVER IT. 047 TO ENSURE ABOVE FOR RE ASSEMBLING.
3. SERVO MOTOR STROKE 205 +0·5 0 TO BE CHECKED AND CLEARANCE 0·3 TO 0·5 TO BE ENSURED BETWEEN SLEEVE IT 041 AND STOPPER IT NO. 074 BY MACHINING THE FACE OF STOPPER IT. NO. 074
4. TESTING OF SERVOMOTOR TO BE CARRIED OUT AS FOLLOWS:-

(4a) DO THE STROKING OF SERVOMOTOR 3·4 TIMES TO CHECK EASY OPERATION OF THE SERVOMOTOR

(4b) CHECK AND RECORD THE STROKE OF THE SERVOMOTOR WHEN IT IS ON ITS STOPS i.e THE DIFFERANCE BETWEEN FULLY OPEN AND FULLY CLOSE POSITION

(4c) LEAKAGE TEST, PRESSURISE THE ASSY. TO A DESIGN PRESSURE OF 40 KG/CM$^2$

(4c-I) LEAKAGE THROUGH CUP SEALS IT. 048 FLANGE JOINTS AT BOTH ENDS, DRAIN CONNECTION, AIR RELEASE PLUGS IT. 072, WELD JOINT OF CYLINDER IT 033 etc. IS NOT AT ALL ALLOWED

(4c-II) LEAKAGE THROUGH PISTON RINGS IT 037 (BETWEEN CYLINDER AND PISTON) SHOULD NOT EXEED 0·025 LIT/SEC.

(4d I) WHEN STOPPER IN OPEN CONDITION, PRESSURE TESTING OF SERVOMOTOR ASSY FOR OPENING & CLOSING SHALL BE CARRIED OUT AT A HYDRAULIC PRESSURE OF 60 KG/CM$^2$.

(4d II) WHEN STOPPER IN CLOSED POSITION, PRESSURE TESTING OF SERVOMOTOR ASSY. FOR OPENING ONLY AT 40 KG/CM$^2$.

5. AFTER TESTING SERVOMOTOR IS TO BE DISMANTLED AND RUBBING SURFACES ARE TO BE CHECKED.
6. SWITCHING ON & OFF CONTECT OF LIMIT SWITCHES IN THE OPEN & CLOSED POSITION OF STOPPER IT. 074 TO BE CHECKED.
7. EFFECTIVENESS OF DAMPING SHALL BE CHECKED.

## AT SITE

1. FOR PROPER TIGHTENING OF REGULATING GEAR IN CLOSED POSITION. THIS SEROMOTOR IS TO BE ADJUSTED FOR A NIPPING PRESSURE OF 5 KG/CM$^2$ AT THIS POSITION, PISTON IT. 034 SHOULD REST ON END COVER IT. 032.
2. DURING ERRECTION PISTON ROD SHELL BE KEPT HORIZONTAL WITH IN 0·03 mm/m.
3. COUPLE THE BASE PLATE IT·030 WITH SERVOMOTOR BY MEANS OF STUD IT. 031 AND NUT IT. 071 IN CENTRAL HOLE AND DOWEL IT. 062 ONLY. ADJUST THE LEVEL OF SERVO MOTOR CENTRE LINE BY MEANS OF LEVELLING SCREW IT. 098. SUPPORTING STRIP TO BE WELDED WITH BASE PLATE & SUPPORT FRAME OF SPIRAL CASING AS SHOWN. LEVELLING SCREWS SHALL BE REMOVED AFTER COMPLETE WELDING AND SERVOMOTOR AND BASE PLATE SHALL BE COUPLED COMPLETELY IN THE REMAINING STUD IT. 031 & NUT IT. 071.
4. FROM 4-PILOT HOLES IN THE CYLINDER DRILL THROUGH & REAM ø36 +0·04 0 FOR DOWEL PIN ITEM NO. 062.

| VAR-00 | REMARKS | VAR NO. | ITEM NO. | DESCRIPTION | DRAWING NO. | IT-NO. / VAR | MATL-CODE / MATL-SPCN. | A CODE | UNIT | UNIT WT. / QTY | ZONE |
|---|---|---|---|---|---|---|---|---|---|---|---|
| – | | – | 099 | GUARD | – 4 203 02 107 06 | — | — | | NO | 0·045 / 002 | K-8 |
| – | | – | 098 | LEVELLING SCRU M30 | – 4 203 02 107 05 | — | — | | NO | 0·60 / 004 | K-8 |
| – | | – | 097 | SUPPORT STRIP 25WX 615 L X 16TK | – — | — | AA 1011608 AA 191108 | | NO | 0·08 / 002 | K-7 |
| – | | – | 096 | BOLT HEX HD. M12X75 | 1 — | — | AA 7111122224 AA 7111122 | | NO | 0·08 / 004 | K-7 |
| – | | – | 095 | CONNECTING BOSS | – 3 203 02 16 009 | — | — | | NO | 1·00 / 002 | K-7 |
| – | | – | 094 | SPRING WASHER P 3/8 | 1 — | — | BP9003531490 | | NO | 0·007 / 005 | K-7 |
| – | | – | 093 | CONNECTING ROD | – 2 203 02 107 02 | — | — | | NO | 46·00 / 001 | K-7 |
| – | | – | 092 | BUSH | – 3 203 02 107 05 | — | — | | NO | 1·550 / 001 | K-7 |
| – | | – | 091 | NUT M90X4 LHT HD | – 4 203 02 00 016 | — | — | | NO | 6·300 / 001 | K-7 |
| – | | – | 090 | SCALE | – 4 203 02 107 01 | — | — | | NO | 0·10 / 001 | K-7 |
| – | | – | 089 | BRACKET | – 3 203 02 107 02 | — | — | | NO | 1·95 / 001 | K-7 |
| – | | – | 088 | TURN BUCKLE | – 3 203 02 00 006 | — | — | | NO | 11·90 / 001 | K-7 |
| – | | – | 087 | NUT M90X4 RH THD | – 4 203 02 00 015 | — | — | | NO | 6·300 / 001 | K-7 |
| – | | – | 086 | POINTER SCREW | – 4 203 02 00 013 | — | — | | NO | 0·080 / 001 | K-7 |
| – | | – | 085 | STUD A M12X25LG | – 3 230 29 49 073 | 001 | — | | NO | 0·030 / 002 | K-7 |
| – | | – | 084 | STOPPER BODY | – 1 203 29 49 002 | — | — | | NO | 57·120 / 001 | K-7 |
| – | | – | 083 | SCRU SLT CHS AP M4X25LG | 1 — | — | AA 7124102138 AA 7124102 | | NO | 0·002 / 001 | K-7 |
| – | | – | 082 | POINTER | – 4 203 02 00 031 | — | — | | NO | 0·04 / 001 | K-7 |
| – | | – | 081 | SPACER | – 4 203 02 00 011 | — | — | | NO | 0·050 / 001 | K-7 |
| – | | – | 080 | SWITCH BASE | – 2 203 02 00 006 | — | — | | NO | 1·590 / 001 | K-7 |
| – | | – | 079 | WHEEL | – 3 203 02 00 005 | — | — | | NO | 1·130 / 001 | K-7 |
| – | | – | 078 | SCREW | – 4 203 02 38 002 | — | — | | NO | 0·35 / 001 | K-7 |
| – | | – | 077 | HANDLE | – 4 203 02 00 008 | — | — | | NO | 0·08 / 001 | K-7 |
| – | | – | 076 | PIN SPLIT 3·2X40ST | 1 — | — | AA 7171089142 AA 7171089 | | NO | 0·002 / 001 | K-7 |
| – | | – | 075 | NUT | – 4 203 02 00 010 | — | — | | NO | 0·150 / 001 | K-7 |

| VAR-00 | REMARKS | VAR NO. | ITEM NO. | DESCRIPTION | DRAWING NO. | IT-NO. / VAR | MATL-CODE / MATL-SPCN. | A CODE | UNIT | UNIT WT. / QTY | ZONE |
|---|---|---|---|---|---|---|---|---|---|---|---|
| – | | – | 074 | STOPPER | – 3 203 02 26 004 | — | — | | NO | 3·200 / 001 | J-6 |
| – | | – | 073 | WASHER | – 4 203 02 92 004 | — | — | | NO | 0·01 / 001 | J-6 |
| – | | – | 072 | AIR RELEASE PLUG EXT. 3/8 P.L. | – 4 203 02 107 04 | 001 — | — | | NO | 1·00 / 002 | J-6 |
| – | | – | 071 | NUT M30 | 3 — | — | BP9003532500 | | — | 0·05 | J-6 |
| – | | – | 070 | CDS TUBE O/D 26·9 X4TK X120LG | – — | — | AA 1041004648 AA 101646 | | NO | 0·264 / 002 | J-6 |
| – | | – | 069 | CU WASHER P 3/4 | 3 — | — | BP9003531510 | | NO | 0·009 / 001 | J-6 |
| – | | – | 068 | ø SEAL SIZE 114 | 2 — | — | BP7241099251 | | NO | 0·010 / 001 | J-6 |
| – | | – | 067 | SPINDLE | – 3 203 02 44 008 | — | — | | NO | 0·100 / 001 | J-6 |
| – | | – | 066 | CU WASHER P 1/4 | 3 — | — | BP9003531480 | | NO | 0·004 / 001 | J-6 |
| – | | – | 065 | PLUG | – 4 203 02 00 033 | 001 — | — | | NO | 0·050 / 001 | J-6 |
| – | | – | 064 | SC CU GRB SOC AP M10X12 | 1 — | — | BP712 5110 045 AA 712 5110 | | NO | 0·004 / 001 | J-6 |
| – | | – | 063 | THROTTLE PLATE | – 4 203 02 44 012 | — | — | | NO | 0·080 / 001 | J-6 |
| – | | – | 062 | DOWEL PIN ø36 NOM X 80LG | – 4 203 02 107 03 | 001 — | — | C | NO | 0·65 / 004 | J-6 |
| – | | – | 061 | STUD A M12X40LG | – 3 230 29 49 073 | 004 — | — | | NO | 0·050 / 004 | J-6 |
| – | | – | 060 | NUT HEX A M12 | 1 — | — | AA 7151115040 | | NO | 0·017 / 007 | J-6 |
| – | | – | 059 | WASHER SPRING SC A12-ST | 1 — | — | AA 7164001987 AA 7164001 | | NO | 0·004 / 008 | J-6 |
| – | | – | 058 | WASHER SPRING SC A3-ST | 1 — | — | AA 7164001952 AA 7164001 | | NO | 0·001 / 001 | J-6 |
| – | | – | 057 | SCRU SLT CHS A M3X12 | 1 — | — | AA 7124102049 AA 7124102 | | NO | 0·001 / 001 | J-6 |
| – | | – | 056 | POINTER | – 4 203 02 00 028 | — | — | | NO | 0·010 / 001 | J-6 |
| – | | – | 055 | NUT HEX A M4 | 1 — | — | AA 7151102020 | | NO | 0·001 / 002 | J-6 |
| – | | – | 054 | SCRU SLT CHS AP M4X20LG | 1 | — | AA 7124102120 AA 7124102 | | NO | 0·002 / 002 | J-6 |
| – | | – | 053 | SCRU HEX P M16X50LG | 1 — | — | AA 7121123533 | | NO | 0·108 / 002 | J-6 |
| – | | – | 052 | SCRU CAP SOC HD M8X20 | 1 — | — | AA 7123125085 AA 7123123 | | NO | 0·016 / 004 | J-6 |
| – | | – | 051 | STUD A M24X90LG | – 3 230 29 49 076 | 010 — | — | | NO | 0·43 / 012 | J-6 |
| – | | – | 050 | 20NB GLOBE VALVE FEMALE END 3/4 | 3 — | — | BP9003530690 | | NO | 2·00 / 002 | J-6 |
| – | | – | 049 | MALE STUD COUPLING 2007 P 3/4 | 3 — | — | BP9003530950 | | NO | 0·900 / 002 | J-6 |
| – | | – | 048 | CUP SEAL OD 160 ID 130 | – H0003 | 67 — | — | | NO | 0·011 / 002 | J-6 |
| – | | – | 047 | SEAL COVER | – 3 203 02 00 004 | — | — | | NO | 6·300 / 001 | J-6 |
| – | | – | 046 | PACKING | – 4 203 02 00 007 | — | — | | NO | 0·06 / 001 | J-6 |
| – | | – | 045 | TAPER DOWEL | – 4 203 02 00 032 | — | — | | NO | 0·040 / 002 | J-6 |
| – | | – | 044 | CYLINDER COVER | – 2 203 02 38 001 | — | — | | NO | 32·00 / 001 | J-6 |
| – | | – | 043 | SCRU GRB SOC. AP M 6 X 16 | 2 — | — | BP7125110987 AA 7125110 | | NO | 0·003 / 004 | J-6 |
| – | | – | 042 | BUSH | – 4 203 02 00 005 | — | — | | NO | 1·50 / 001 | J-6 |
| – | | – | 041 | SLEEVE | – 2 203 02 107 01 | — | — | | NO | 44·00 / 001 | J-6 |
| – | | – | 040 | PISTON ROD | – 3 203 02 107 03 | — | — | | NO | 50·00 / 001 | J-6 |
| – | | – | 039 | PISTON COVER | – 2 203 02 107 04 | — | — | | NO | 26·21 / 001 | J-6 |
| – | | – | 038 | BUSH | – 3 203 02 00 002 | — | — | | NO | 1·28 / 001 | J-6 |
| – | | – | 037 | PISTON RING | – 3 203 02 00 001 | — | — | | NO | 0·70 / 002 | J-6 |
| – | | – | 036 | PIN | – 4 203 02 00 003 | — | — | | NO | 5·40 / 001 | J-6 |
| – | | – | 035 | BUSH SLEEVE | – 4 203 02 00 004 | — | — | | NO | 1·30 / 001 | J-6 |
| – | | – | 034 | PISTON | – 1 203 02 107 01 | — | — | | NO | 70·00 / 001 | J-6 |
| – | | – | 033 | CYLINDER | – 0 203 02 107 02 | — | — | | NO | 195·00 / 001 | J-6 |
| – | | – | 032 | COVER | – 2 203 02 107 03 | — | — | | NO | 62·00 / 001 | J-6 |
| – | | – | 031 | STUD M30X70LG | – 4 203 02 107 02 | 001 — | — | C | NO | 0·47 / 006 | J-6 |
| – | | – | 030 | BASE PLATE | – 3 203 02 107 06 | — | — | | NO | 75·00 / 001 | J-6 |
| – | | – | 029 | WASHER | – 4 203 02 00 027 | — | — | | NO | 0·005 / 012 | J-6 |
| – | | – | 028 | NUT HEX A M16 | 1 — | — | AA 7151115059 AA 7151115 | | NO | 0·030 / 024 | J-6 |
| – | | – | 027 | STUD M16X45 LG | – 4 203 02 92 002 | 002 — | — | | NO | 0·110 / 024 | J-6 |
| – | | – | 026 | BOLT HEX. HD. A M12X65LG. | 1 — | — | AA 7111122 216 AA 7111122 | | NO | 0·072 / 004 | J-6 |
| – | | – | 025 | STUD M24X55LG | – 4 203 02 92 002 | 001 — | — | | NO | 0·3 / 012 | J-6 |
| – | | – | 024 | NUT HEX M24 | 3 — | — | BP9003532490 | | NO | 0·110 / 024 | J-6 |
| TO BE CUT FROM 40LG | | – | 023 | SCRU HEX HD. GR. A M16X15 LG | 1 — | — | AA 7121123517 AA 7111122 | | NO | 0·215 / 001 | J-6 |
| – | | – | 022 | SPRING | – 4 203 02 44 015 | — | — | | NO | 0·100 / 001 | J-6 |
| – | | – | 021 | THROTTLE | – 4 203 02 44 013 | — | — | | NO | 0·050 / 001 | J-6 |
| – | | – | 020 | THROTTLE BODY | – 3 203 02 106 09 | — | — | | NO | 4·020 / 001 | J-6 |
| – | | – | 019 | COPPER WASHER P 3/8 | 3 — | — | BP9003531520 | | NO | 0·010 / 001 | J-6 |
| – | | – | 018 | CONNECTING PIPE | – 4 203 02 44 014 | — | — | | NO | 0·400 / 001 | J-6 |
| – | | – | 017 | UNION NUT | – 4 203 02 00 023 | — | — | | NO | 0·100 / 002 | J-6 |
| – | | – | 016 | NIPPLE | – 4 203 02 00 022 | — | — | | NO | 0·060 / 002 | J-6 |
| – | | – | 015 | PIPE | – 4 203 02 92 001 | — | — | | NO | 0·300 / 001 | J-6 |
| – | | – | 014 | RUBBER CORD NOM DIA 6X2300LG. | 3 — | — | AA 5984440706 | | NO | 0·300 / 001 | J-6 |
| – | | – | 013 | RUBBER CORD NOM DIA 4X1500LG | 3 — | — | AA 5984407943 | | NO | 0·100 / 001 | J-6 |
| – | | – | 012 | SUPPORT | – 4 203 02 00 019 | — | — | | NO | 0·100 / 001 | J-6 |
| – | | – | 011 | LEVER | – 4 203 02 00 018 | — | — | | NO | 0·02 / 001 | J-6 |
| – | | – | 010 | SCRU SLT CHS AP M4X16 | 1 — | — | AA 7124102112 AA 7124102 | | NO | 0·001 / 002 | J-6 |
| – | | – | 009 | BRACKET | – 4 203 02 00 017 | — | — | | NO | 0·21 / 001 | J-6 |
| – | | – | 008 | PIN SPLIT 2·5X20ST | 1 — | — | AA 7171089088 AA 7171089 | | NO | 0·001 / 001 | J-6 |
| – | | – | 007 | LIMIT SWITCH (CUTLER HAMMER) | 3 — | — | BP3003533020 | | NO | 0·500 / 003 | J-6 |
| – | | – | 006 | WASHER MC D4·3ST | 1 — | — | AA 7181001021 AA 7161001 | | NO | 0·001 / 018 | J-6 |
| – | | – | 005 | SCRU SLT CHS AP M4X10 | 1 — | — | AA 7124102030 AA 7124102 | | NO | 0·005 / 014 | J-6 |
| – | | – | 004 | DIAL PLATE | 3 4 203 02 00 029 | — | — | | NO | 0·050 / 001 | J-6 |
| – | | – | 003 | PLATE | – 4 203 02 00 020 | — | — | | NO | 0·020 / 001 | J-6 |
| – | | – | 002 | BRACKET | – 3 203 02 00 009 | — | — | | NO | 0·020 / 001 | J-6 |
| – | | – | 001 | SCREW | – 4 203 02 00 021 | — | — | | NO | 0·05 / 002 | J-6 |

| VAR 00 | REMARKS | VAR NO. | ITEM NO. | DESCRIPTION | STD | DRAWING NO. | MATL CODE / MATL SPCN. | UNIT WT. / QTY. |
|---|---|---|---|---|---|---|---|---|
| 28 → CARD TYPE-3 | | | | 28 → CARD TYPE-1 | | | | 28 → CARD TYPE-2 |

ADDITIONAL INFORMATION

STATUS OF DRAWING: U

DISTRIBUTION OF PRINTS: HTE-2, WTM-5, FBM-7, THX-1

TYPE OF PRODUCT OR NAME OF CUSTOMER/PROJECT: KOPILI EXTENSION

BHARAT HEAVY ELECTRICALS LTD. BHOPAL

| | NAME | SIGN | DATE |
|---|---|---|---|
| DRN. | D.C. DIXIT | | 22.6.93 |
| CHD. | SINESH KUMAR | | |
| APPD. | A.K. AGARWAL | | |

| REV | DATE | ALTERED/CHD | APPD |
|---|---|---|---|
| 01 | 14.8.93 | APPD | REV. 02 |
| 02 | 12.12.93 | APPD | |

IN BOM IT. NO. 020, 052, 064 MODIFIED.

| REV | DATE | ALT | CHD | APPD |
|---|---|---|---|---|
| 03 | 19.9.94 | | | |

IT. 64 M10x12 WAS M8x12.

IN REV-01 DRG WAS NOT APPD.

| DEPT. | GRADE OF UN TOL DIM. | SCALE | WEIGHT (Kg) | REF. TO ASSY. DRG. | ITEM REQ. | NO. OF ITEMS |
|---|---|---|---|---|---|---|
| HTE | | 1:2·5 | 645·00 | — | — | 059 |
| CODE 402 | | | | | | |

TITLE: G.V. SERVO WITH STOPPER L.H.

CARD CODE | DRAWING NO. 0 203 02 107 01 | REV. 03 | SHEET NO. 01 | NO. OF SHEETS 01

SIZE A0

THE INFORMATION ON THIS DOCUMENT IS THE PROPERTY OF BHARAT HEAVY ELECTRICALS LIMITED. IT MUST NOT BE USED DIRECTLY OR INDIRECTLY IN ANY WAY DETRIMENTAL TO THE INTEREST OF THE COMPANY.

INVENTORY NO. | SIGN & DATE | REF. DRG. NO.

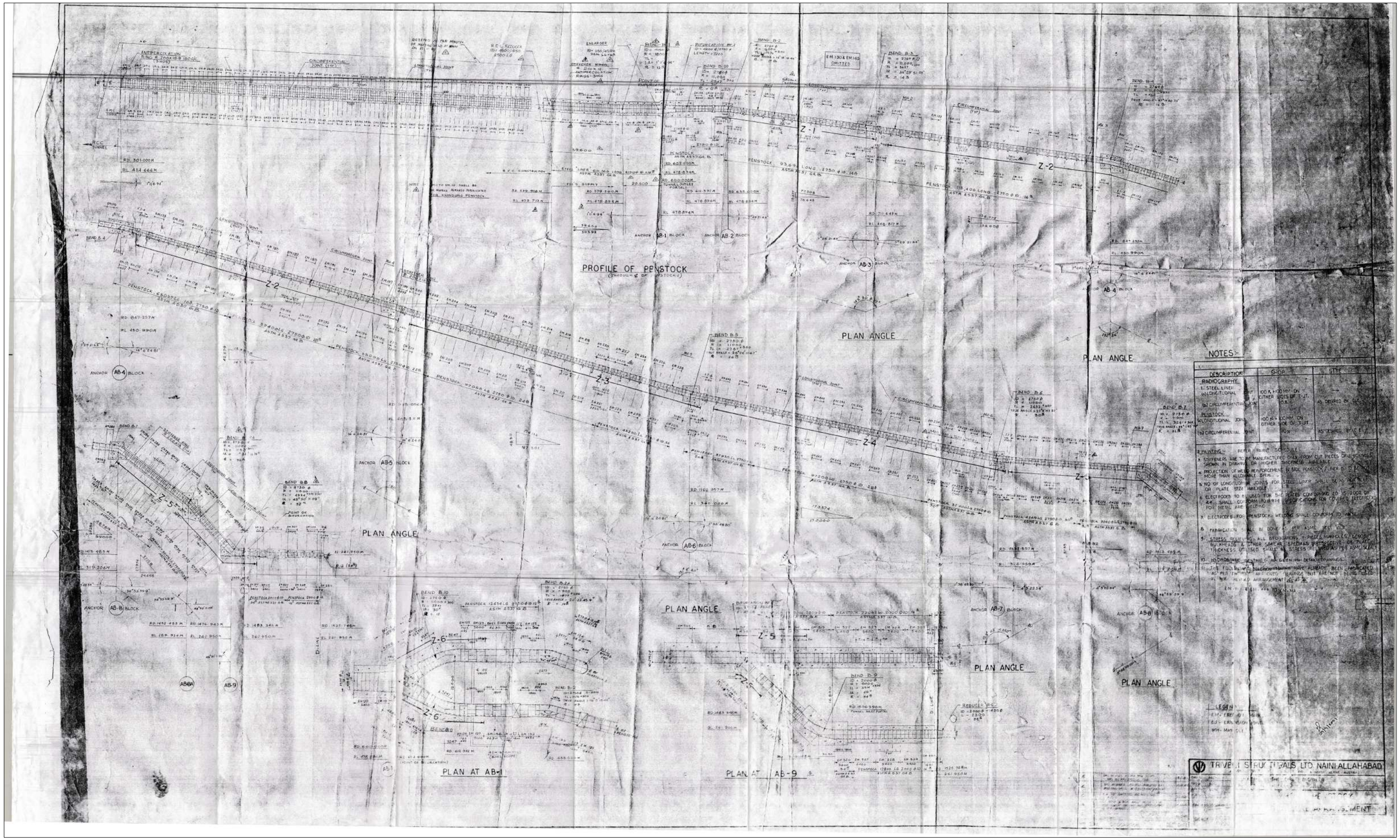
PROFILE OF PENSTOCK
PLAN ANGLE
PLAN ANGLE
PLAN ANGLE
PLAN ANGLE
PLAN ANGLE
PLAN ANGLE
PLAN AT AB-1
PLAN AT AB-9
NOTES:-
DESCRIPTION
SHOP
SITE
RADIOGRAPHY
1. STEEL LINER
(a) LONGITUDINAL JOINT
(b) CIRCUMFERENTIAL JOINT
PENSTOCK
WELDIONTUDINAL JOINT
(b) CIRCUMFERENTIAL JOINT
TRIVENI STRUCTURALS LTD NAINI ALLAHABAD

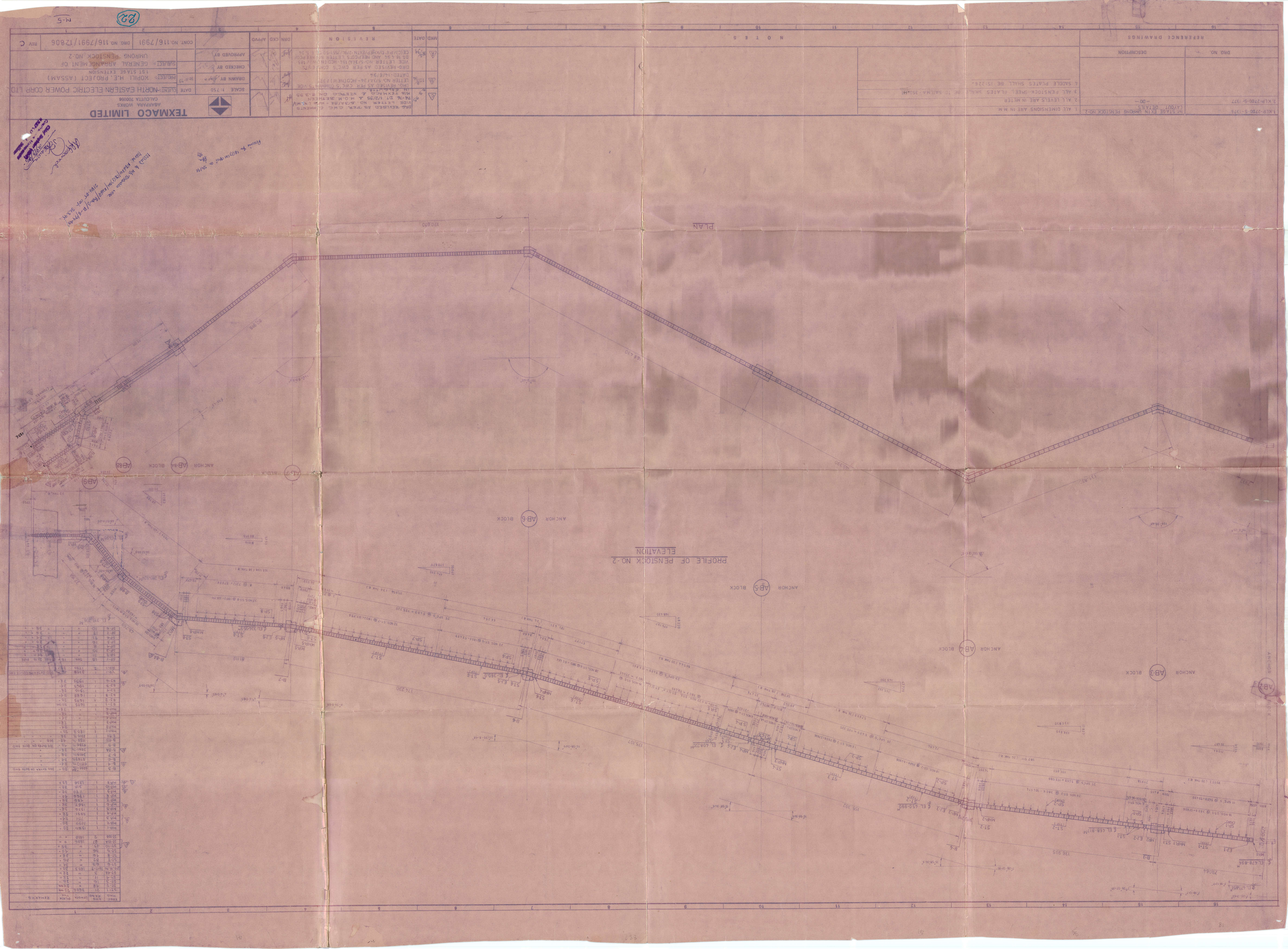
TEXMACO LIMITED
AGARPARA WORKS
CALCUTTA 700058
SCALE 1:750
CLIENT:-NORTH EASTERN ELECTRIC POWER CORP LTD
PROJECT: KOPILI H.E. PROJECT (ASSAM)
1ST STAGE EXTENSION
SUBJECT: GENERAL ARRANGEMENT OF UMRONG PENSTOCK NO.-2
DRAWN BY
CHECKED BY
APPROVED BY
CONT. NO. 116/7991
DRG. NO. 116/7991/12806
REV C
REVISION
DRN
CKD
APPVD
DATE
MKD
NOTES
REFERENCE DRAWINGS
DRG. NO.
DESCRIPTION
1. ALL DIMENSIONS ARE IN M.M
2. ALL LEVELS ARE IN METER
3. ALL PENSTOCK SHELL PLATES SHALL BE IS SAIL-350HI
4. SADDLE PLATES SHALL BE IS:2281.
1ST STAGE EXTN UMRONG PENSTOCK NO-2
LAYOUT DETAILS
-00-
PLAN
PROFILE OF PENSTOCK NO-2
ELEVATION
ANCHOR AB-3 BLOCK
ANCHOR AB-4 BLOCK
ANCHOR AB-5 BLOCK
ANCHOR AB-6 BLOCK
ANCHOR AB-7 BLOCK
ANCHOR AB-8 BLOCK
ANCHOR AB-9 BLOCK
ANCHOR AB-2 BLOCK
ANCHOR AB-1 BLOCK
EL 478.69M
EL 468.81M
EL 450.99M
EL 408.70M
EL 380.0M
EL 306.95M
EL 304.95M
EL 288.00M
EL 277.00M
EL 275.00M
EL 268.00M
EL 267.00M
EL 265.00M
EL 263.00M
EL 262.00M
EL 261.00M
EL 260.00M
EL 259.00M
EL 258.00M
EL 257.00M
EL 256.00M
EL 255.00M
EL 254.00M
EL 253.00M
EL 252.00M
EL 251.00M
EL 250.00M
EL 249.00M
EL 248.00M
EL 247.00M
EL 246.00M
EL 245.00M
EL 244.00M
EL 243.00M
EL 242.00M
EL 241.00M
EL 240.00M
EL 239.00M
EL 238.00M
EL 237.00M
EL 236.00M
EL 235.00M
EL 234.00M
EL 233.00M
EL 232.00M
EL 231.00M
EL 230.00M
EL 229.00M
EL 228.00M
EL 227.00M
EL 226.00M
EL 225.00M
EL 224.00M
EL 223.00M
EL 222.00M
EL 221.00M
EL 220.00M
EL 219.00M
EL 218.00M
EL 217.00M
EL 216.00M
EL 215.00M
EL 214.00M
EL 213.00M
EL 212.00M
EL 211.00M
EL 210.00M
EL 209.00M
EL 208.00M
EL 207.00M
EL 206.00M
EL 205.00M
EL 204.00M
EL 203.00M
EL 202.00M
EL 201.00M
EL 200.00M
EL 199.00M
EL 198.00M
EL 197.00M
EL 196.00M
EL 195.00M
EL 194.00M
EL 193.00M
EL 192.00M
EL 191.00M
EL 190.00M
EL 189.00M
EL 188.00M
EL 187.00M
EL 186.00M
EL 185.00M
EL 184.00M
EL 183.00M
EL 182.00M
EL 181.00M
EL 180.00M
EL 179.00M
EL 178.00M
EL 177.00M
EL 176.00M
EL 175.00M
EL 174.00M
EL 173.00M
EL 172.00M
EL 171.00M
EL 170.00M
EL 169.00M
EL 168.00M
EL 167.00M
EL 166.00M
EL 165.00M
EL 164.00M
EL 163.00M
EL 162.00M
EL 161.00M
EL 160.00M
EL 159.00M
EL 158.00M
EL 157.00M
EL 156.00M
EL 155.00M
EL 154.00M
EL 153.00M
EL 152.00M
EL 151.00M
EL 150.00M
EL 149.00M
EL 148.00M
EL 147.00M
EL 146.00M
EL 145.00M
EL 144.00M
EL 143.00M
EL 142.00M
EL 141.00M
EL 140.00M
EL 139.00M
EL 138.00M
EL 137.00M
EL 136.00M
EL 135.00M
EL 134.00M
EL 133.00M
EL 132.00M
EL 131.00M
EL 130.00M
EL 129.00M
EL 128.00M
EL 127.00M
EL 126.00M
EL 125.00M
EL 124.00M
EL 123.00M
EL 122.00M
EL 121.00M
EL 120.00M
EL 119.00M
EL 118.00M
EL 117.00M
EL 116.00M
EL 115.00M
EL 114.00M
EL 113.00M
EL 112.00M
EL 111.00M
EL 110.00M
EL 109.00M
EL 108.00M
EL 107.00M
EL 106.00M
EL 105.00M
EL 104.00M
EL 103.00M
EL 102.00M
EL 101.00M
EL 100.00M
EL 99.00M
EL 98.00M
EL 97.00M
EL 96.00M
EL 95.00M
EL 94.00M
EL 93.00M
EL 92.00M
EL 91.00M
EL 90.00M
EL 89.00M
EL 88.00M
EL 87.00M
EL 86.00M
EL 85.00M
EL 84.00M
EL 83.00M
EL 82.00M
EL 81.00M
EL 80.00M
EL 79.00M
EL 78.00M
EL 77.00M
EL 76.00M
EL 75.00M
EL 74.00M
EL 73.00M
EL 72.00M
EL 71.00M
EL 70.00M
EL 69.00M
EL 68.00M
EL 67.00M
EL 66.00M
EL 65.00M
EL 64.00M
EL 63.00M
EL 62.00M
EL 61.00M
EL 60.00M
EL 59.00M
EL 58.00M
EL 57.00M
EL 56.00M
EL 55.00M
EL 54.00M
EL 53.00M
EL 52.00M
EL 51.00M
EL 50.00M
EL 49.00M
EL 48.00M
EL 47.00M
EL 46.00M
EL 45.00M
EL 44.00M
EL 43.00M
EL 42.00M
EL 41.00M
EL 40.00M
EL 39.00M
EL 38.00M
EL 37.00M
EL 36.00M
EL 35.00M
EL 34.00M
EL 33.00M
EL 32.00M
EL 31.00M
EL 30.00M
EL 29.00M
EL 28.00M
EL 27.00M
EL 26.00M
EL 25.00M
EL 24.00M
EL 23.00M
EL 22.00M
EL 21.00M
EL 20.00M
EL 19.00M
EL 18.00M
EL 17.00M
EL 16.00M
EL 15.00M
EL 14.00M
EL 13.00M
EL 12.00M
EL 11.00M
EL 10.00M
EL 9.00M
EL 8.00M
EL 7.00M
EL 6.00M
EL 5.00M
EL 4.00M
EL 3.00M
EL 2.00M
EL 1.00M
EL 0.00M

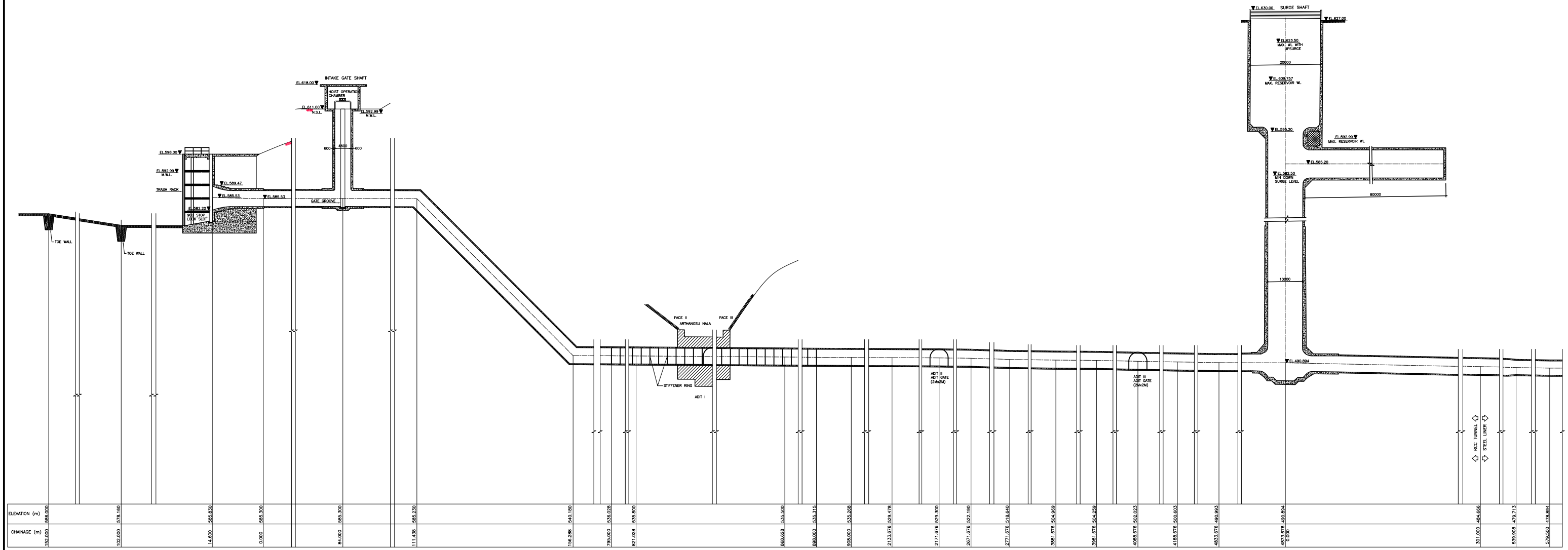


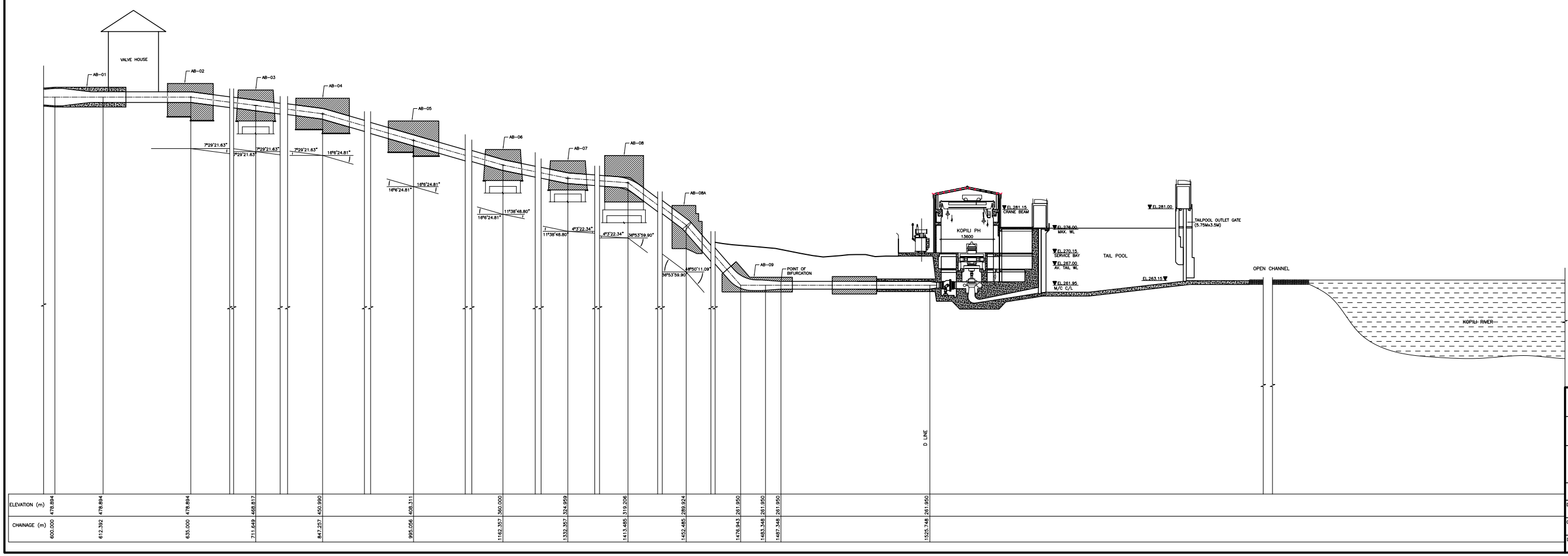


NORTH EASTERN ELECTRIC POWER CORPORATION LTD.
(A GOVERNMENT OF INDIA ENTERPRISE)

KOPILI HYDRO ELECTRIC PLANT
(UMRONGSO, ASSAM)

WATER CONDUCTOR SYSTEM
L SECTION

DESIGN & ENGINEERING WING
NEEPCO LTD. - GUWAHATI (ASSAM)

| DRAWN | RECOMMENDED | DRAWING STATUS | |
|---|---|---|---|
| | | DPR STAGE | |
| CHECKED | APPROVED | DATE 14.09.2020 | REVISION |

DRAWING NO. NEEPCO/UMRONG/RES_RNM/DPR/003

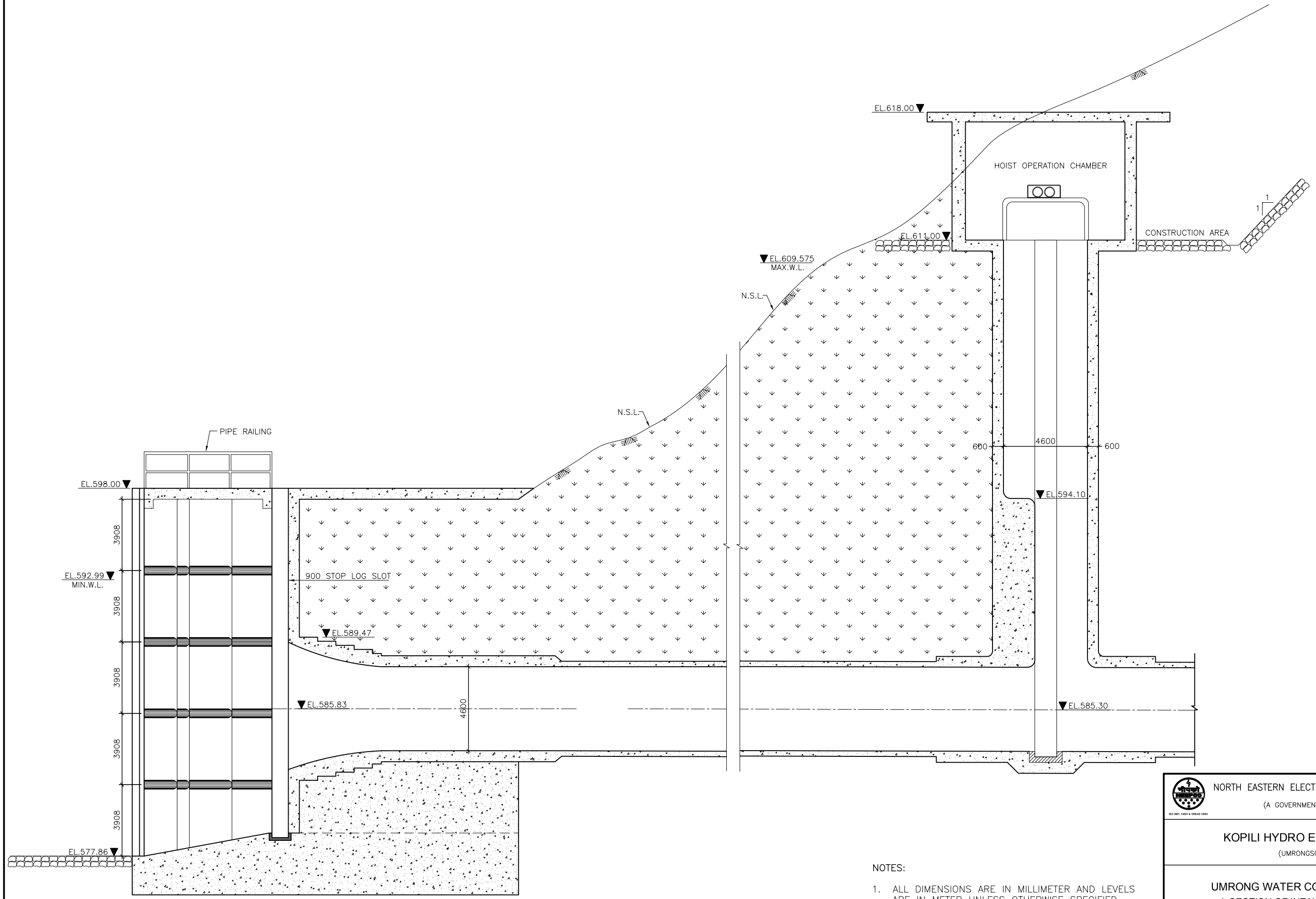


NOTES:

1. ALL DIMENSIONS ARE IN MILLIMETER AND LEVELS ARE IN METER UNLESS OTHERWISE SPECIFIED.
2. NO DIMENSION SHALL BE MEASURED FROM THE DRAWING.
3. FOR SECTIONAL ELEVATION & OTEHR DETAILS OF GATE CHAMBER, DRG. NO. 005 MAY BE REFERRED.

NORTH EASTERN ELECTRIC POWER CORPORATION LTD.

(A GOVERNMENT OF INDIA ENTERPRISE)

ISO 9001, 14001 & OHSAS 18001

KOPILI HYDRO ELECTRIC PLANT

(UMRONGSO, ASSAM)

UMRONG WATER CONDUCTOR SYSTEM

L SECTION OF INTAKE AND GATE SHAFT

DESIGN & ENGINEERING WING

NEEPCO LTD. – GUWAHATI (ASSAM)

| DRAWN | RECOMMENDED | DRAWING STATUS DPR STAGE | |
|---|---|---|---|
| CHECKED | APPROVED | DATE 14.09.2020 | REVISION R( |

DRAWING NO.

NEEPCO/UMRONG/RES_RNM/DPR/004

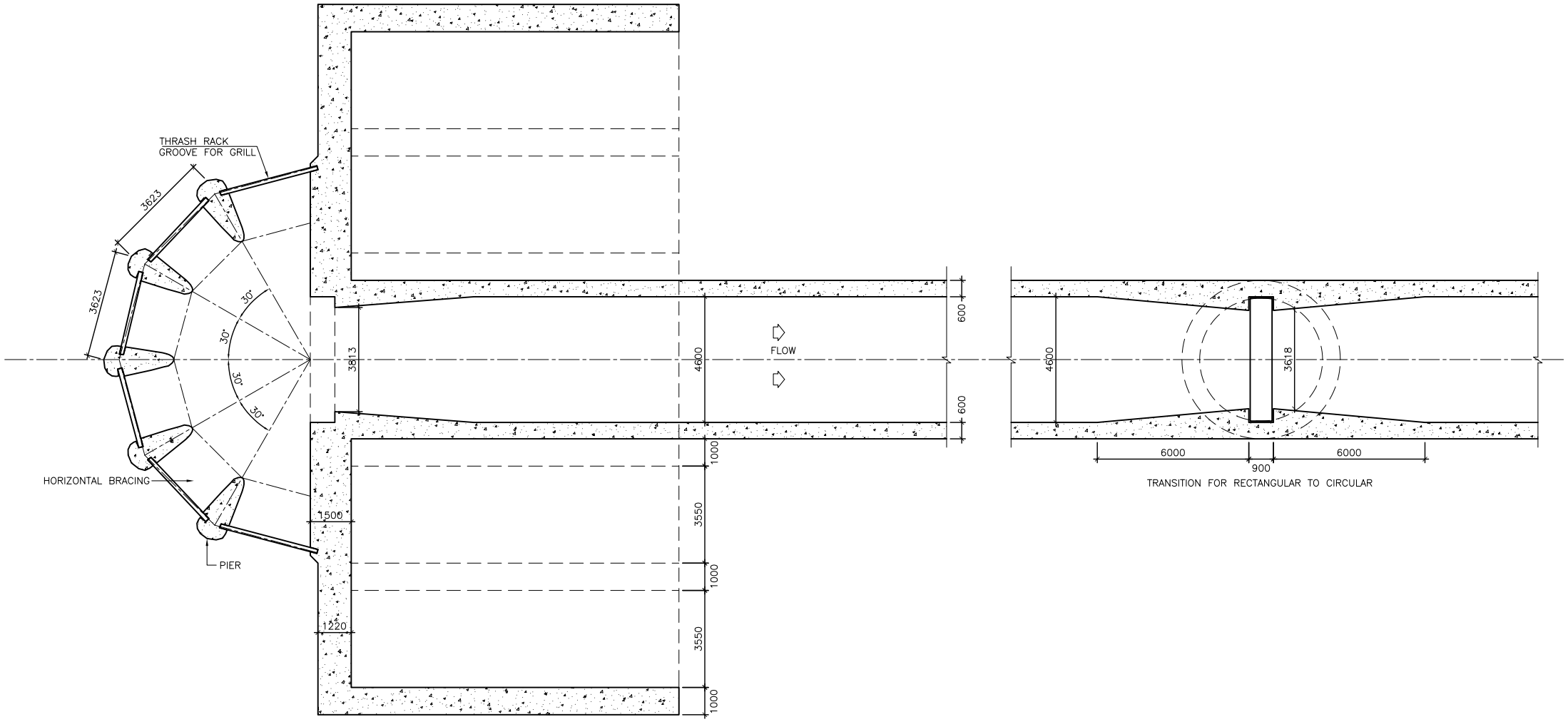


TRANSITION FOR RECTANGULAR TO CIRCULAR

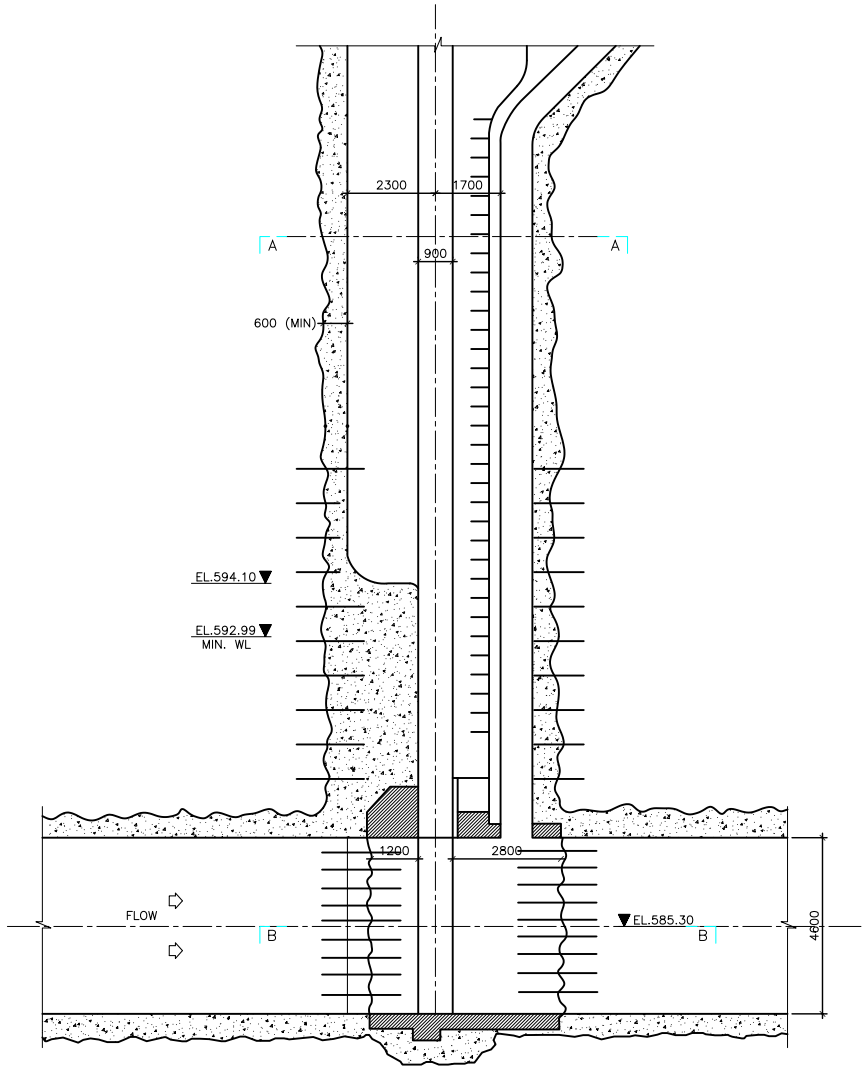


SECTIONAL ELEVATION OF GATE CHAMBER

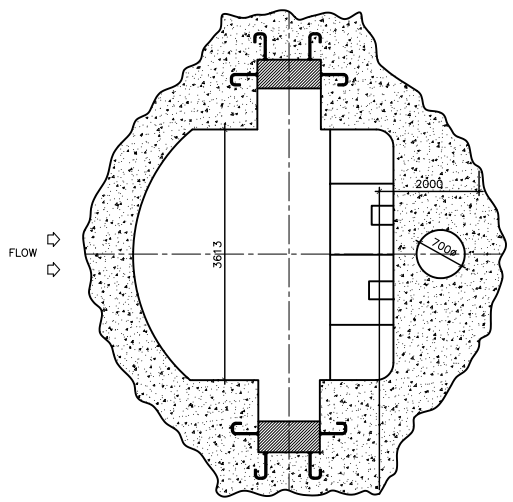


SECTION A–A

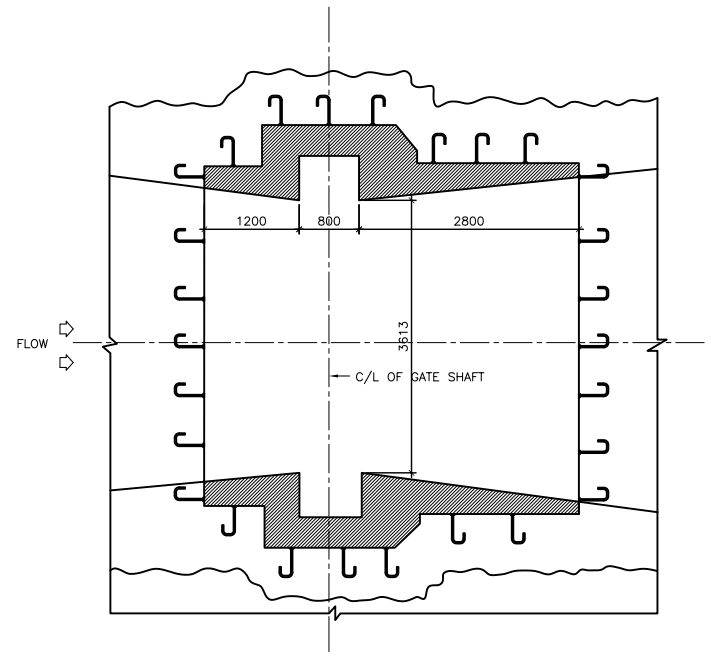


SECTION B–B

NOTES:

1. ALL DIMENSIONS ARE IN MILLIMETER AND LEVELS ARE IN METER UNLESS OTHERWISE SPECIFIED.
2. NO DIMENSION SHALL BE MEASURED FROM THE DRAWING.

NORTH EASTERN ELECTRIC POWER CORPORATION LTD.

(A GOVERNMENT OF INDIA ENTERPRISE)

ISO 9001, 14001 & OHSAS 18001

KOPILI HYDRO ELECTRIC PLANT

(UMRONGSO, ASSAM)

UMRONG WATER CONDUCTOR SYSTEM

PLAN SHOWING HRT INTAKE AND GATE SHAFT

DESIGN & ENGINEERING WING

NEEPCO LTD. – GUWAHATI (ASSAM)

| DRAWN | RECOMMENDED | DRAWING STATUS DPR STAGE | |
|---|---|---|---|
| CHECKED | APPROVED | DATE 14.09.2020 | REVISION R( |

DRAWING NO.

NEEPCO/UMRONG/RES_RNM/DPR/005

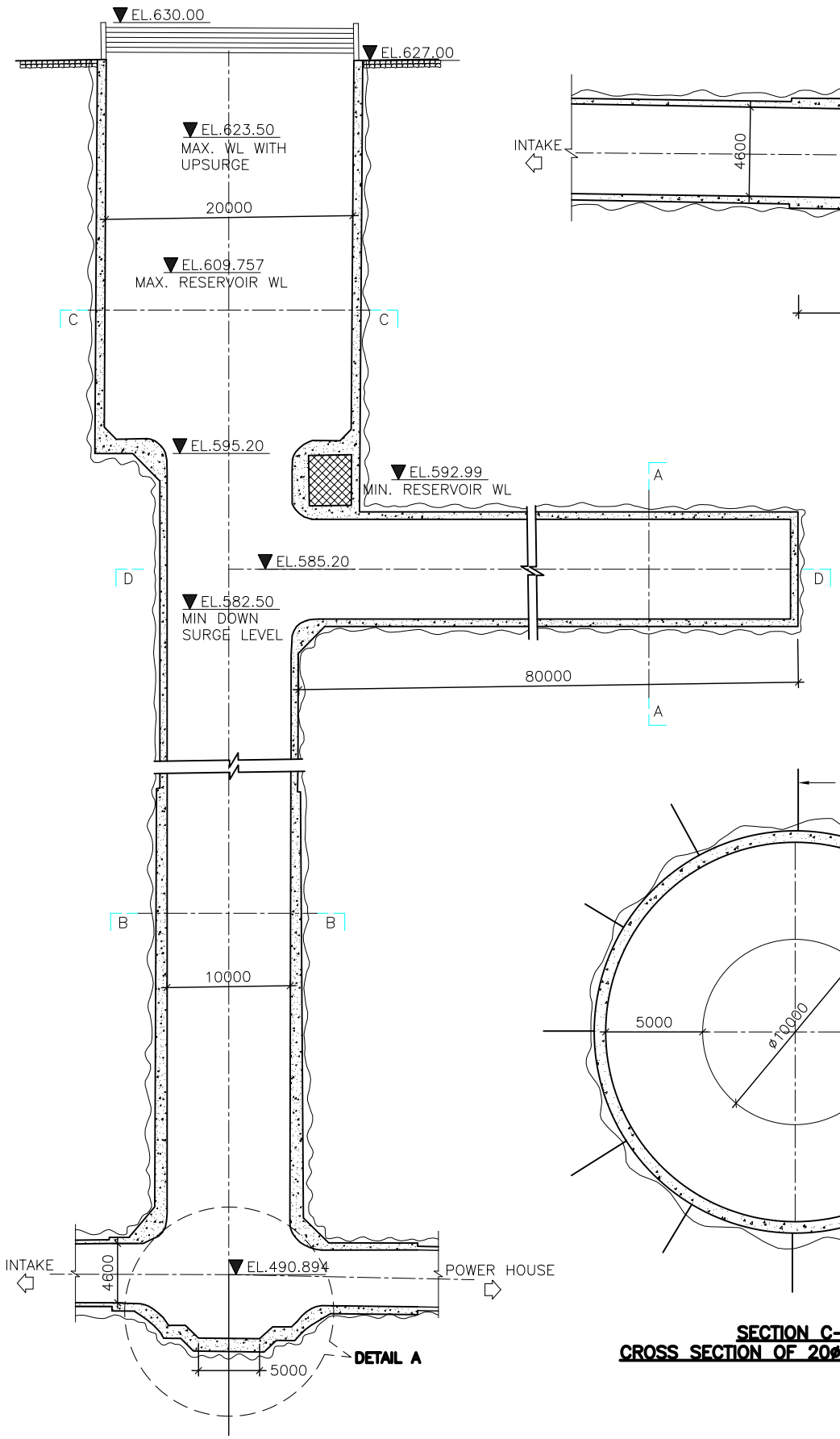


**SECTIONAL ELEVATION OF SURGE SHAFT ALONG THE C/L OF LOWER EXPANSION CHAMBER**

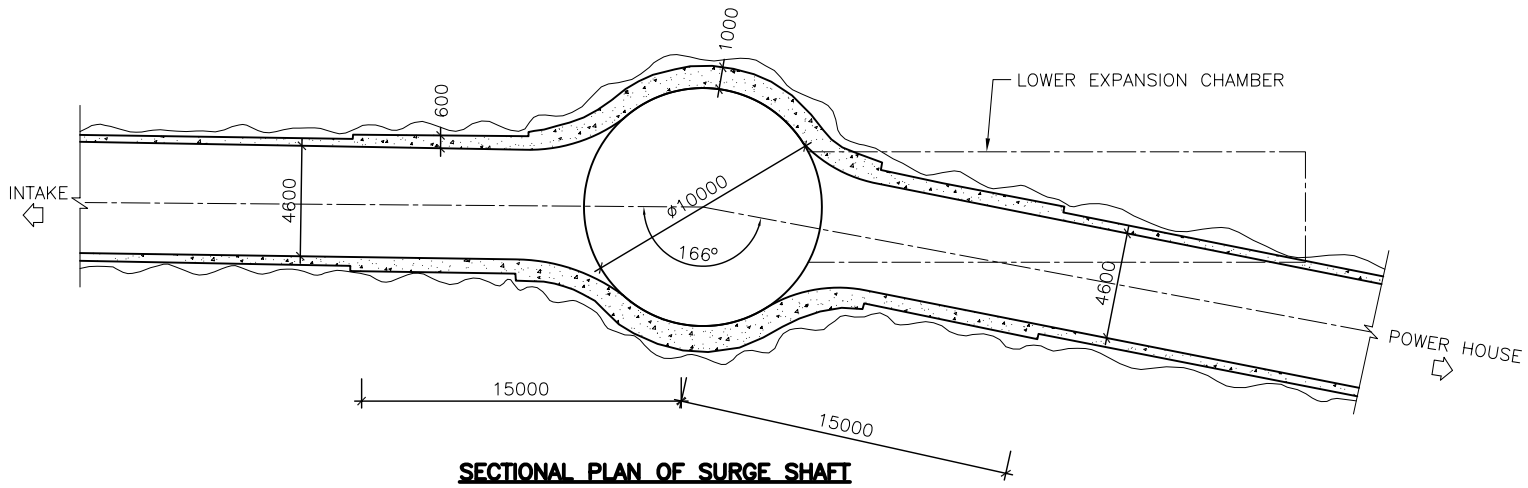


**SECTIONAL PLAN OF SURGE SHAFT**

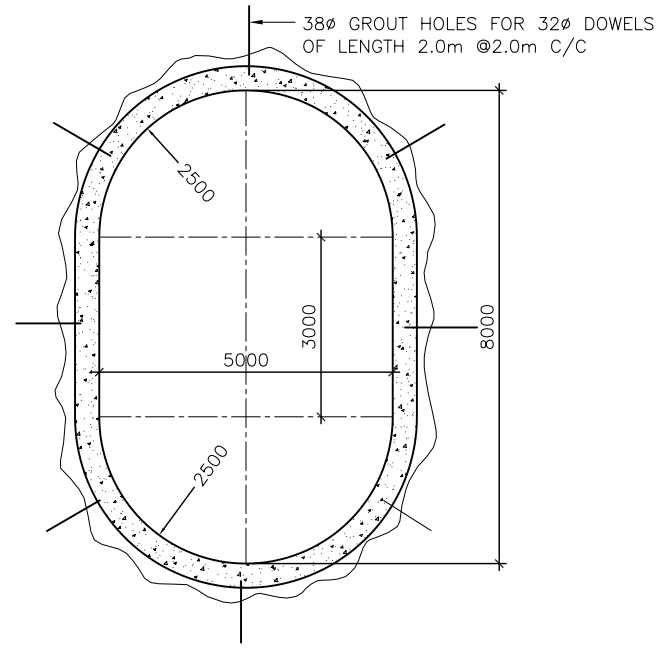


**SECTION A–A**
**CROSS SECTION OF EXPANSION CHAMBER**

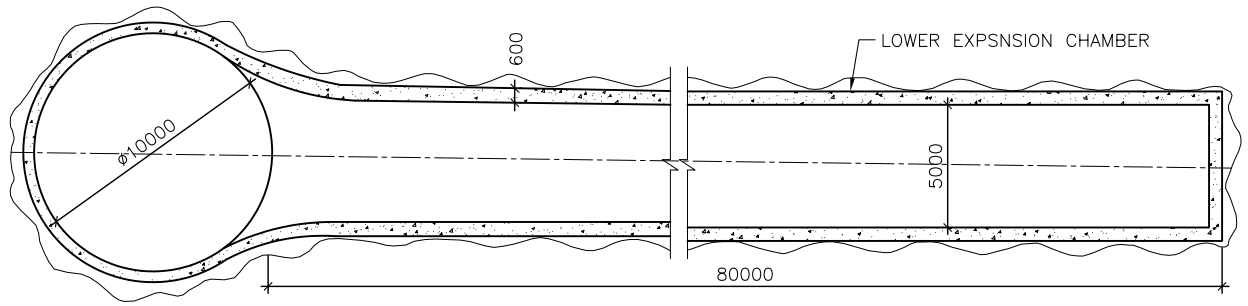


**SECTIONAL PLAN AT D–D**

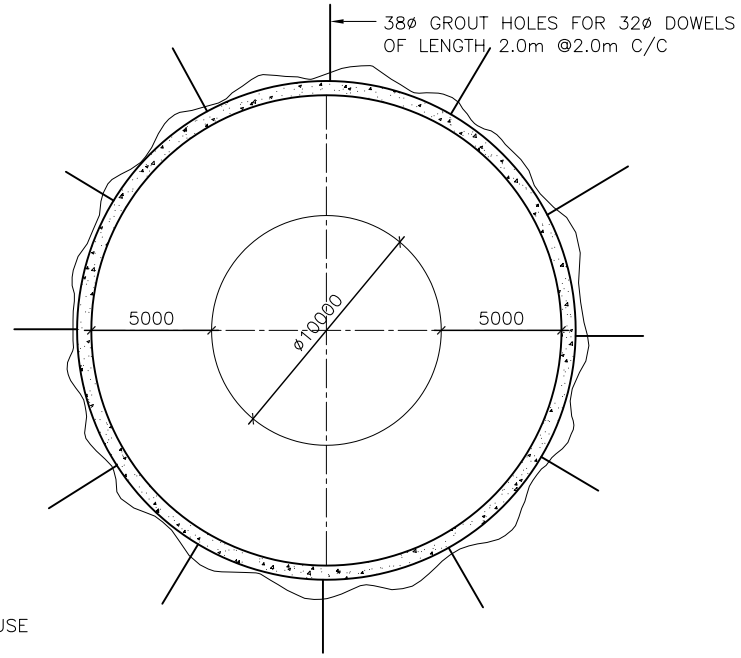


**SECTION C–C**
**CROSS SECTION OF 20ø SURGE SHAFT**

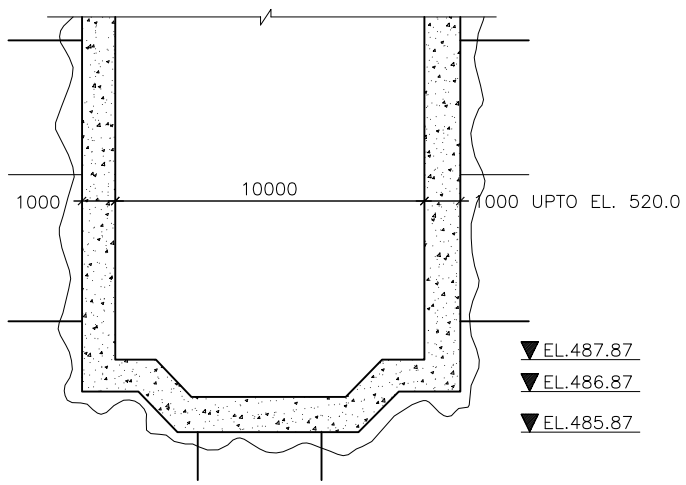


**DETAIL A**

NOTES:

1. ALL DIMENSIONS ARE IN MILLIMETER AND LEVELS ARE IN METER UNLESS OTHERWISE SPECIFIED.
2. NO DIMENSION SHALL BE MEASURED FROM THE DRAWING.

NORTH EASTERN ELECTRIC POWER CORPORATION LTD.
(A GOVERNMENT OF INDIA ENTERPRISE)

KOPILI HYDRO ELECTRIC PLANT
(UMRONGSO, ASSAM)

UMRONG DAM
GENERAL ARRANGEMENT OF SURGE SHAFT

DESIGN & ENGINEERING WING
NEEPCO LTD. – GUWAHATI (ASSAM)

| DRAWN | RECOMMENDED | DRAWING STATUS DPR STAGE | |
|---|---|---|---|
| CHECKED | APPROVED | DATE 14.09.2020 | REVISION R( |

DRAWING NO.
NEEPCO/UMRONGSO/RES_RNM/DPR/007

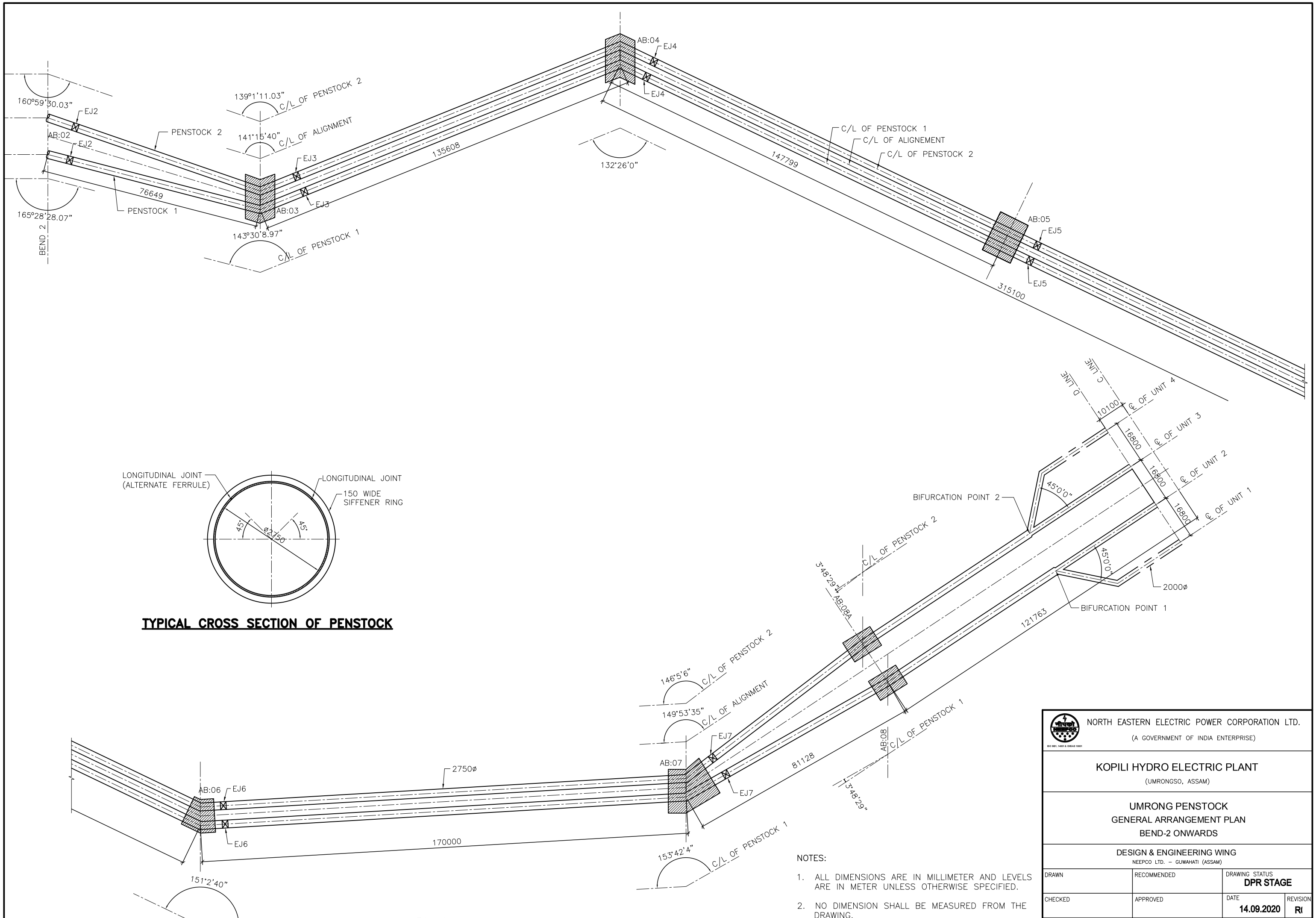


NOTES:

1. ALL DIMENSIONS ARE IN MILLIMETER AND LEVELS ARE IN METER UNLESS OTHERWISE SPECIFIED.
2. NO DIMENSION SHALL BE MEASURED FROM THE DRAWING.

NORTH EASTERN ELECTRIC POWER CORPORATION LTD.

(A GOVERNMENT OF INDIA ENTERPRISE)

ISO 9001, 14001 & OHSAS 18001

KOPILI HYDRO ELECTRIC PLANT

(UMRONGSO, ASSAM)

UMRONG PENSTOCK

GENERAL ARRANGEMENT PLAN

BEND-2 ONWARDS

DESIGN & ENGINEERING WING

NEEPCO LTD. – GUWAHATI (ASSAM)

| DRAWN | RECOMMENDED | DRAWING STATUS DPR STAGE | |
|---|---|---|---|
| CHECKED | APPROVED | DATE 14.09.2020 | REVISION R( |

DRAWING NO. NEEPCO/UMRONG/RES_RNM/DPR/008

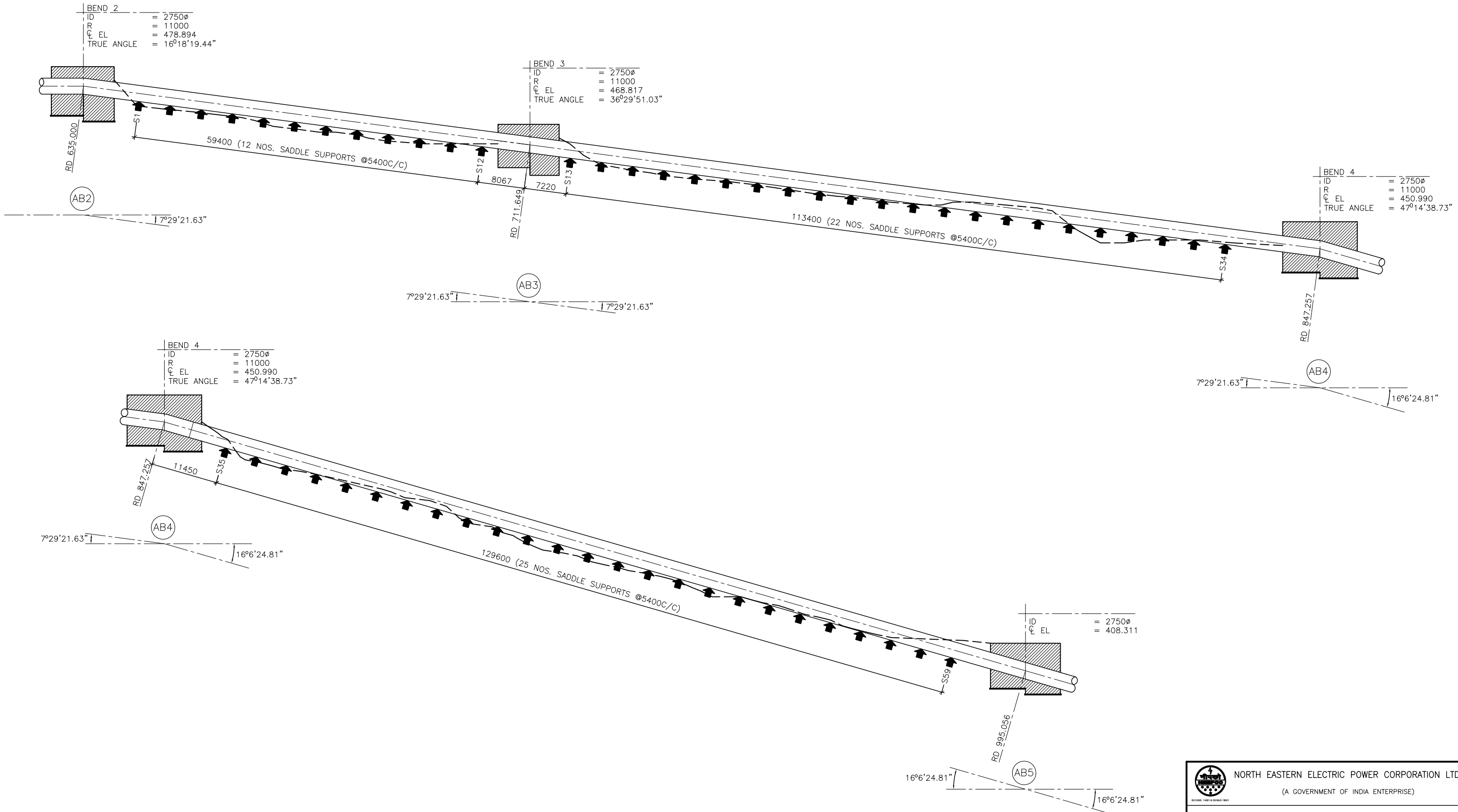


NORTH EASTERN ELECTRIC POWER CORPORATION LTD.

(A GOVERNMENT OF INDIA ENTERPRISE)

ISO 9001, 14001 & OHSAS 18001

KOPILI HYDRO ELECTRIC PLANT

(UMRONGSO, ASSAM)

UMRONG PENSTOCK NO. 01

PROFILE OF PRESENT NSL SHOWING SADDLE POSITION

ANCHOR BLOCK 2 TO ANCHOR BLOCK 5

DESIGN & ENGINEERING WING

NEEPCO LTD. – GUWAHATI (ASSAM)

| DRAWN | RECOMMENDED | DRAWING STATUS **DPR STAGE** | |
|---|---|---|---|
| CHECKED | APPROVED | DATE **14.09.2020** | REVISION **R0** |

DRAWING NO. **NEEPCO/UMRONG/RES_RNM/DPR/009**

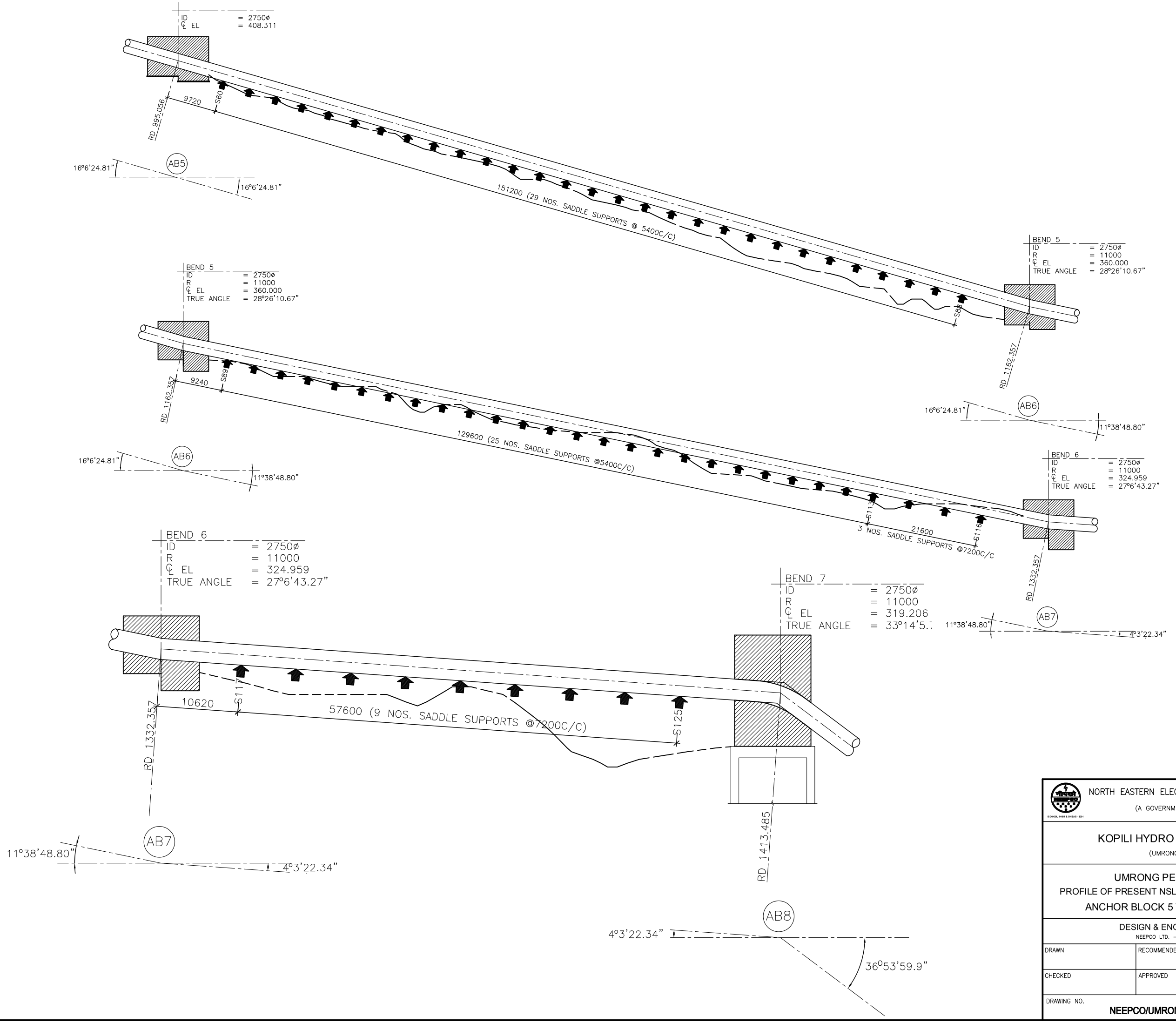


NORTH EASTERN ELECTRIC POWER CORPORATION LTD.

(A GOVERNMENT OF INDIA ENTERPRISE)

KOPILI HYDRO ELECTRIC PLANT

(UMRONGSO, ASSAM)

UMRONG PENSTOCK NO. 01

PROFILE OF PRESENT NSL SHOWING SADDLE POSITION

ANCHOR BLOCK 5 TO ANCHOR BLOCK 8

DESIGN & ENGINEERING WING

NEEPCO LTD. – GUWAHATI (ASSAM)

| DRAWN | RECOMMENDED | DRAWING STATUS **DPR STAGE** | |
|---|---|---|---|
| CHECKED | APPROVED | DATE **14.09.2020** | REVISION **R(** |

DRAWING NO. **NEEPCO/UMRONG/RES_RNM/DPR/010**

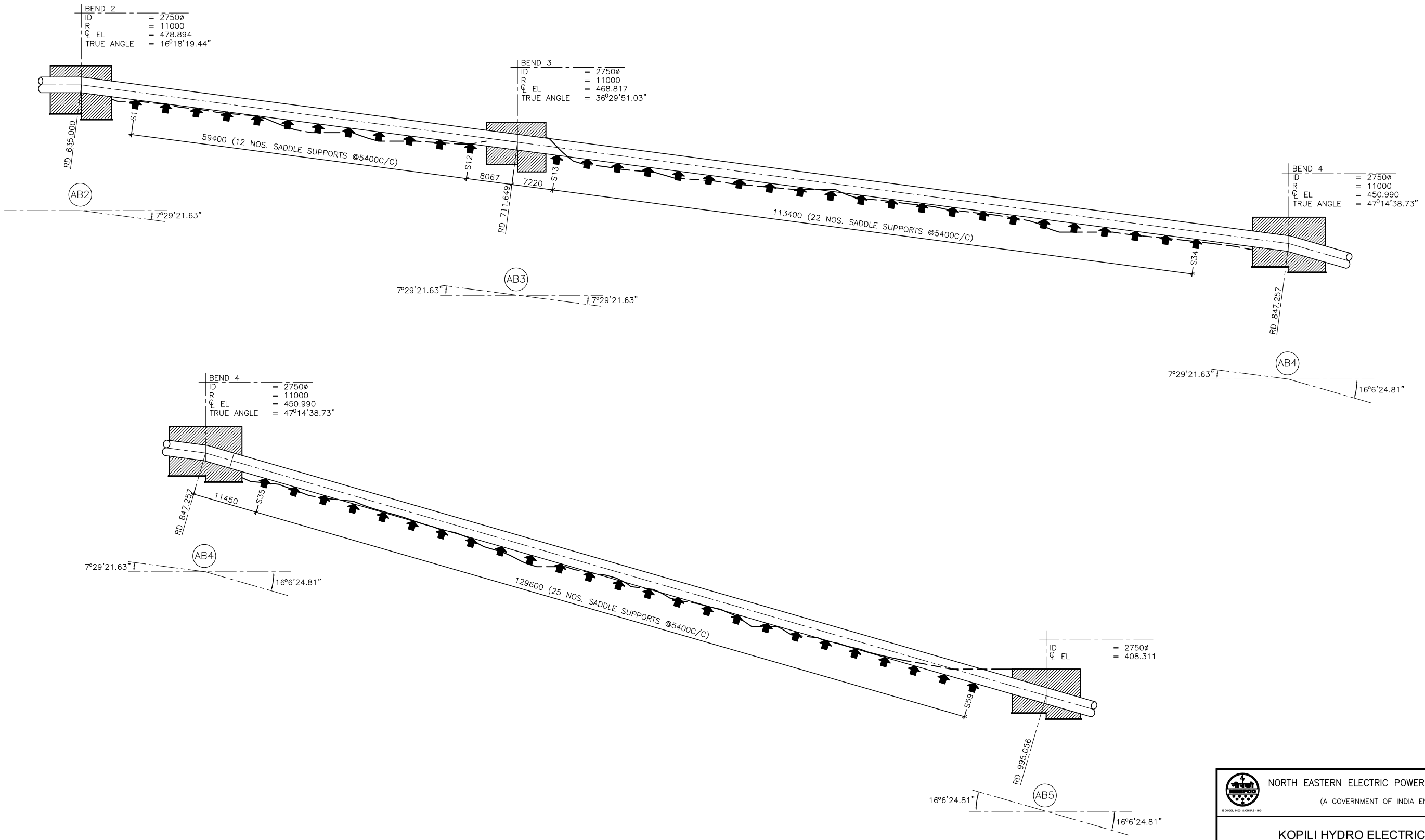


NORTH EASTERN ELECTRIC POWER CORPORATION LTD.

(A GOVERNMENT OF INDIA ENTERPRISE)

KOPILI HYDRO ELECTRIC PLANT

(UMRONGSO, ASSAM)

UMRONG PENSTOCK NO. 02

PROFILE OF PRESENT NSL SHOWING SADDLE POSITION

ANCHOR BLOCK 2 TO ANCHOR BLOCK 5

DESIGN & ENGINEERING WING

NEEPCO LTD. – GUWAHATI (ASSAM)

| DRAWN | RECOMMENDED | DRAWING STATUS | |
|---|---|---|---|
| | | DPR STAGE | |
| CHECKED | APPROVED | DATE 14.09.2020 | REVISION R( |

DRAWING NO. NEEPCO/UMRONG/RES_RNM/DPR/011

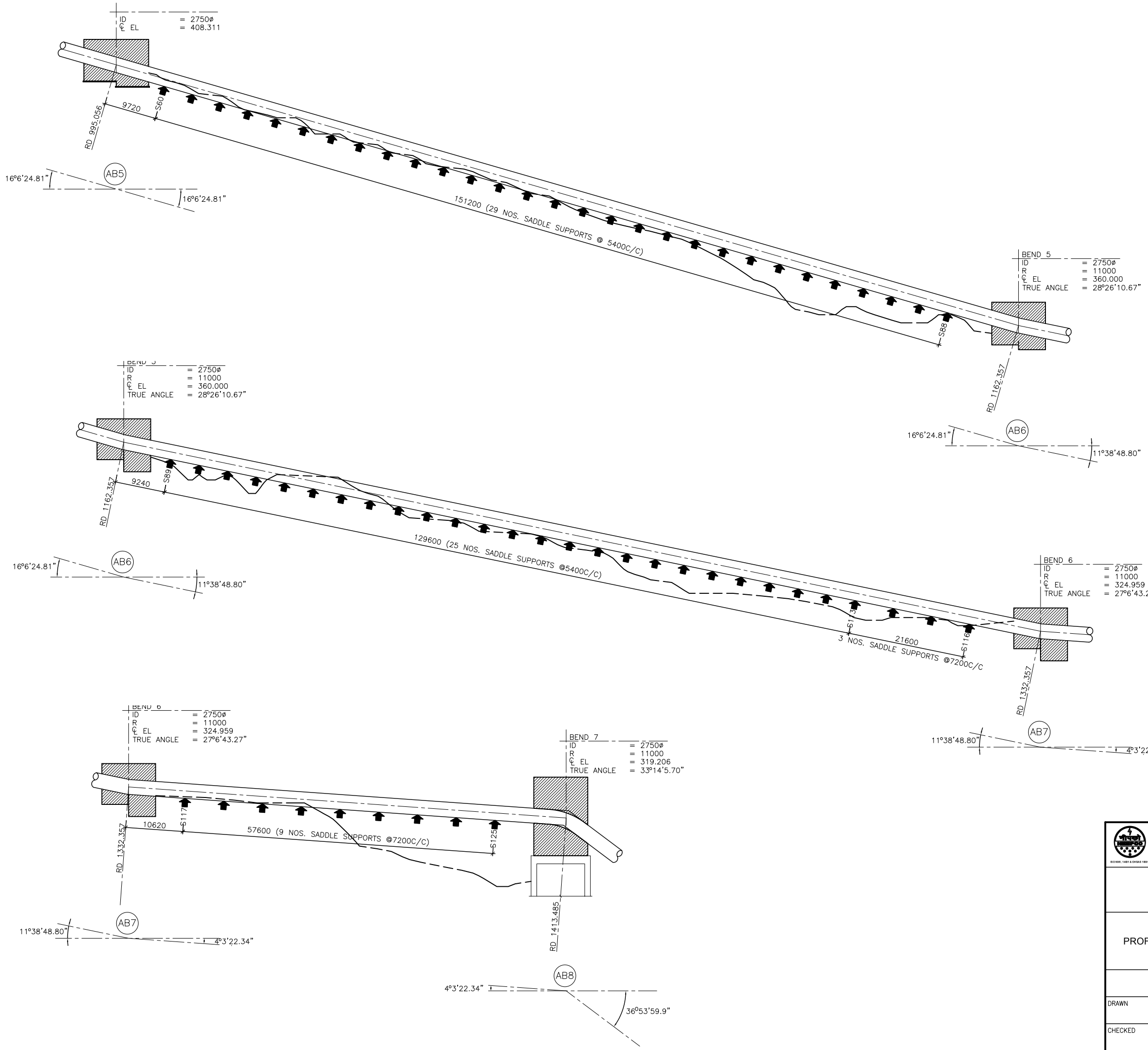


NORTH EASTERN ELECTRIC POWER CORPORATION LTD.

(A GOVERNMENT OF INDIA ENTERPRISE)

ISO 9001, 14001 & OHSAS 18001

KOPILI HYDRO ELECTRIC PLANT

(UMRONGSO, ASSAM)

UMRONG PENSTOCK NO. 02

PROFILE OF PRESENT NSL SHOWING SADDLE POSITION

ANCHOR BLOCK 5 TO ANCHOR BLOCK 8

DESIGN & ENGINEERING WING

NEEPCO LTD. – GUWAHATI (ASSAM)

| DRAWN | RECOMMENDED | DRAWING STATUS DPR STAGE | |
|---|---|---|---|
| CHECKED | APPROVED | DATE 14.09.2020 | REVISION R0 |

DRAWING NO. NEEPCO/UMRONGSO/RES_RNM/DPR/012

**Summary of Head Loss Details of Kopili Water Conductor System**

| Sl. No. | Units | Head Loss (m) | | |
|---|---|---|---|---|
| | | **Rated Net Head** | **Maximum Net Head** | **Minimum Net Head** |
| **1.** | All Units Running | 45.61 | 43.21 | 51.42 |
| **2.** | 3 (three) Units Running | 29.67 | 28.39 | 32.58 |
| **3.** | 2 (two) Units Running | 12.46 | 12.02 | 13.45 |
| **4.** | 1 (one) Unit Running | 2.99 | 2.90 | 3.20 |

FIRST ANGLE PROJECTION

(ALL DIMENSIONS ARE IN mm)

DRG. NO. 0 203 03 107 01

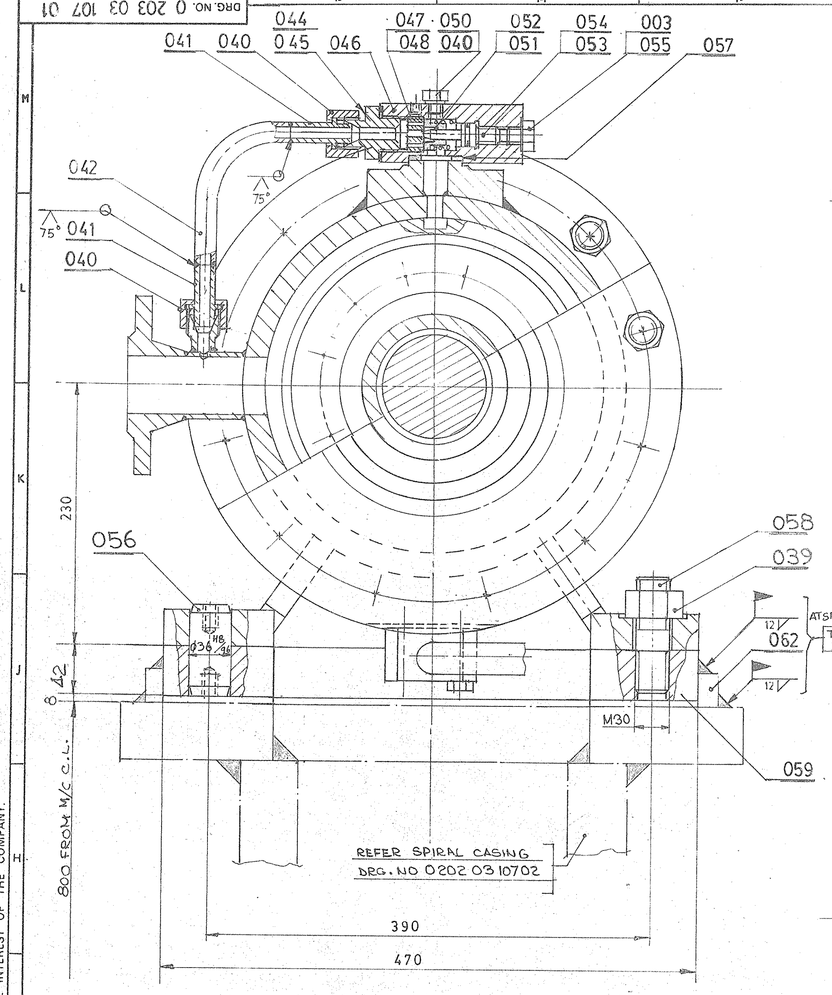


SECTION 'B-B'
ZONE:- M9

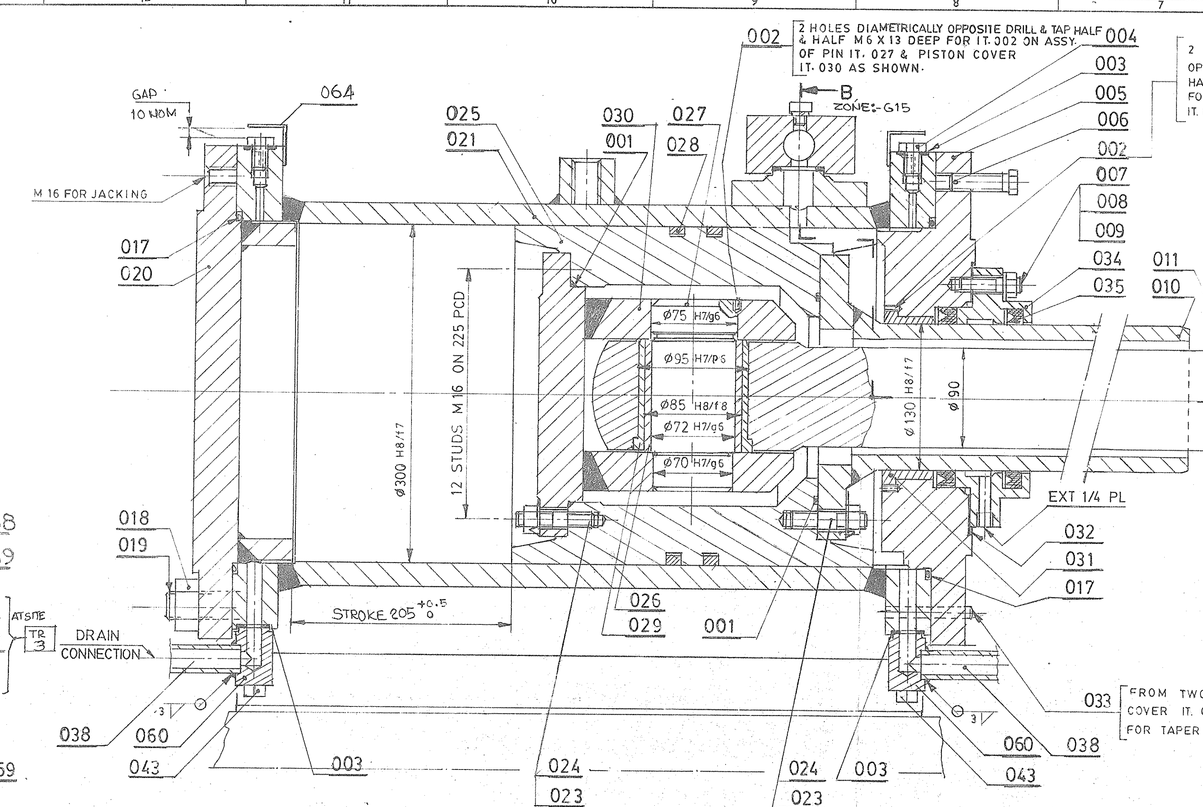


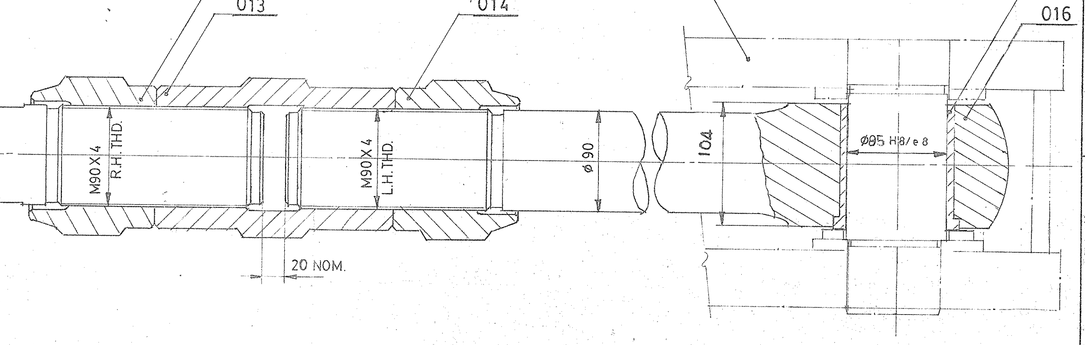


SECTION A-A

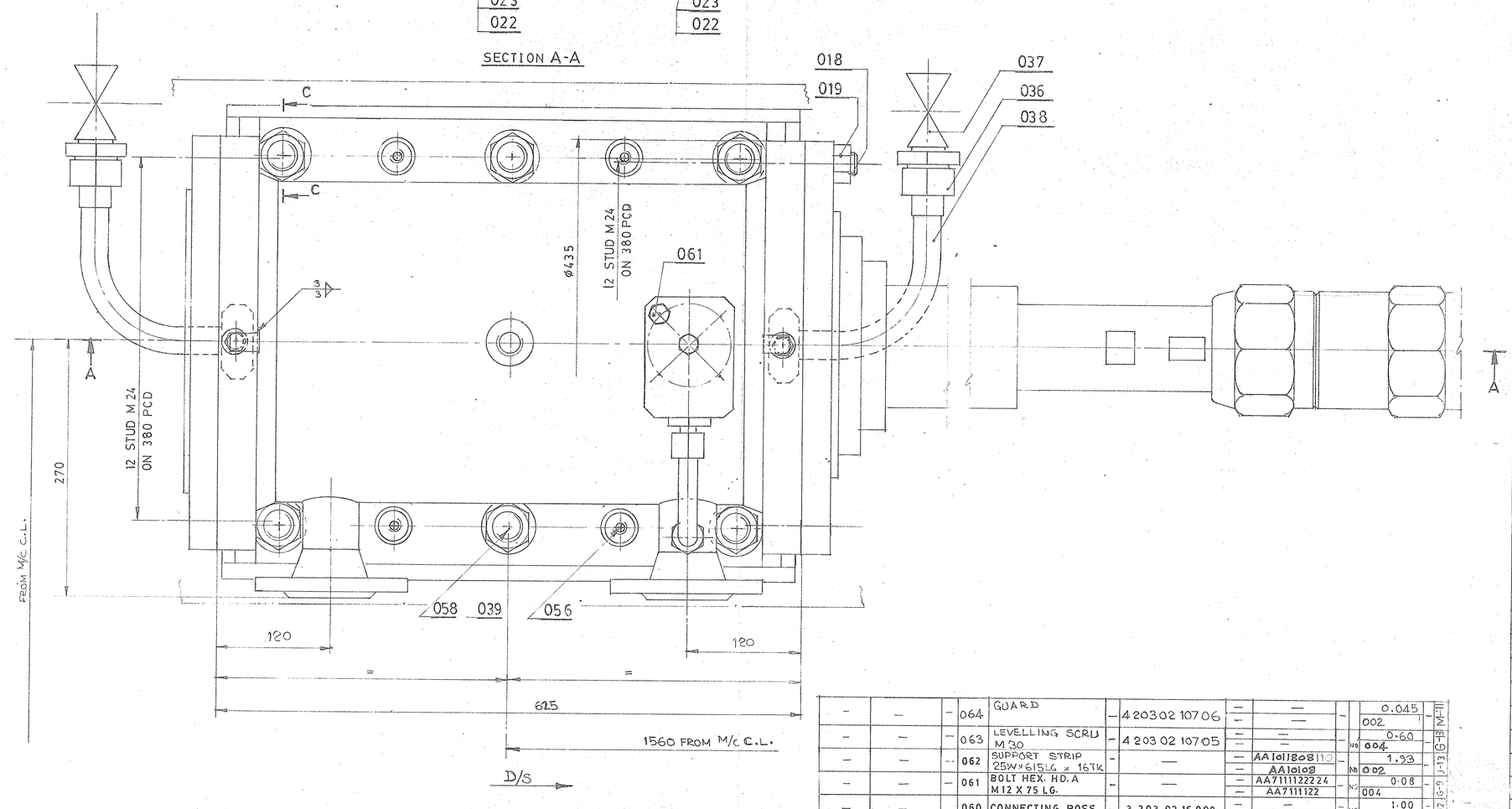


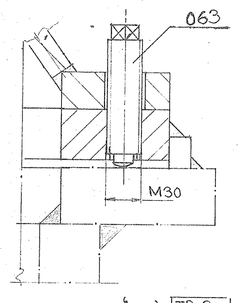


SECTION - 'CC' TR-3 AT SITE

TECHNICAL REQUIREMENTS :-

1. DURING ASSY. OF PISTON WITH PISTON ROD BUSH IT. 029 TO BE LUBRICATED PROFUSELY.
2. ENSURE DURING THE ASSY. THAT THE CYLINDER PORT & SLOT IN THE PISTON COINCIDE MATCH MARK THE SLEEVE IT. 010 & SEAL COVER IT. 034 TO ENSURE ABOVE FOR REASSEMBLING.
3. SERVOMOTOR STROKE 205 $^{+0.5}_{0}$ TO BE CHECKED.
4. TESTING OF SERVOMOTOR TO BE CARRIED OUT AS FOLLOWS :-

4a. DO THE STROKING OF SERVOMOTOR 3-4 TIMES TO CHECK EASY OPERATION OF THE SERVO.
4b. CHECK & RECORD THE STROKE OF THE SERVOMOTOR WHEN IT IS ON ITS STOPS ie. THE DIFFERENCE BETWEEN FULLY OPEN AND FULLY CLOSED POSITION.
4c. LEAKAGE TEST :- PRESSURISE THE ASSY. TO A DESIGN PRESSURE OF 40 KG/CM$^2$
(CI) LEAKAGE THROUGH CUP SEALS IT. 035 FLANGE JOINTS AT BOTH ENDS. DRAIN CONNECTION AIR RELEASE PLUGS IT 004 WELD JOINTS OF CYLINDER IT 021 etc. IS NOT AT ALL ALLOWED.
(CII) LEAKAGE THROUGH PISTON RINGS IT. 028 (BETWEEN CYLINDER AND PISTON) SHOULD NOT EXCEED 0·025 lit/sec.
4d. PRESSURE TESTING OF SERVOMOTOR ASSY. FOR OPENING AND CLOSING SHALL BE CARRIED OUT AT HYDRAULIC PRESSURE OF 60 KG/CM$^2$.
5. AFTER TESTING SERVOMOTOR IS TO BE DISMANTLED AND RUBBING SURFACES ARE TO BE CHECKED.
6. EFFECTIVENESS OF DAMPING SHALL BE CHECKED.

AT SITE

1. FOR PROPER TIGHTENING OF REGULATING GEAR IN CLOSED POSITION THIS SERVOMOTOR IS TO BE ADJUSTED FOR A NIPPING PRESSURE OF 5 KG/CM$^2$ AT THIS POSITION IT. 025 SHOULD REST ON END COVER IT. 020.
2. DURING ERECTION PISTON ROD SHALL BE KEPT HORIZONTAL WITH IN 0·03 mm/metre.
3. COUPLE THE BASE PLATE IT. 059 WITH SERVO MOTOR BY MEANS OF STUD IT. 058 AND NUT IT. 039 IN CENTRAL HOLE AND DOWEL IT. 056 ONLY. ADJUST THE LEVEL OF SERVO MOTOR CENTRE LINE BY MEANS OF LEVELING SCREWS IT. 063. SUPPORTING STRIP SHALL BE WELDED WITH BASE PLATE AND SUPPORT FRAME OF SPIRAL CASING AS SHOWN. LEVELLING SCREWS SHALL BE REMOVED AFTER COMPLETE WELDING AND SERVO MOTOR AND BASE PLATES SHALL BE COUPLED COMPLETELY IN THE REMAINING STUD IT. 058 & NUT IT. 039
4. FROM 4-PILOT HOLES IN THE CYLINDER DRILL THROUGH & REAM ø36 $^{+0.04}_{0}$ FOR DOWEL PIN IT. NO. 056.

| VAR. OO | REMARKS | VAR. NO | ITEM NO. | DESCRIPTION | SYS | DRAWING NO. | IT. NO. / VAR. | MATL CODE / MATL SPCN. | UNIT | UNIT WT. / QTY | ZONE |
|---|---|---|---|---|---|---|---|---|---|---|---|
| — | — | — | 064 | GUARD | — | 4 203 02 10706 | — | — | — | 0.045 / 002 | M-11 |
| — | — | — | 063 | LEVELLING SCRU M 30 | — | 4 203 02 10705 | — | — | NO | 0.60 / 004 | M-11 |
| — | — | — | 062 | SUPPORT STRIP 25W x 615LG x 16TK | — | — | — | AA1011808110 / AA10108 | NO | 1.93 / 002 | |
| — | — | — | 061 | BOLT HEX. HD. A M 12 X 75 LG. | — | — | — | AA7111122224 / AA7111122 | NO | 0.08 / 004 | |
| — | — | — | 060 | CONNECTING BOSS | — | 3 203 02 16 009 | — | — | NO | 1.00 / 002 | |
| — | — | — | 059 | BASE PLATE | — | 3 203 02 10706 | — | — | — | 75.00 | |
| — | — | — | 058 | STUD M30 X 70 LG. | — | 4 203 02 10702 | 001 | — | NO | 0.47 / 001 | |
| — | — | — | 057 | CU WASHER P 3/4 | 3 | — | — | BP9003531510 | NO | 0.009 / 001 | |
| — | — | — | 056 | DOWEL PIN 36 NOM X 80 LG. | — | 4 203 02 10703 | 001 | — | NO | 0.60 / 004 | |
| — | CUT FROM 40LG WT STOCK | — | 055 | SCRU HEX HD GR A M 16 X 15 LG. | 1 | — | — | AA7121123517 / AA7121123 | NO | 0.21 / 001 | |
| — | — | — | 054 | 'O' SEAL SIZE 114 | 2 | — | — | BP7241019923 | NO | 0.10 / 001 | |
| — | — | — | 053 | SPINDLE | — | 3 203 02 44 008 | — | — | NO | 0.100 / 001 | |
| — | — | — | 052 | SPRING | — | 3 203 02 44 015 | — | — | NO | 0.100 / 001 | |
| — | — | — | 051 | THROTTLE | — | 4 203 02 44 013 | — | — | NO | 0.050 / 001 | |

| VAR. OO | REMARKS | VAR. NO | ITEM NO. | DESCRIPTION | SYS | DRAWING NO. | IT. NO. / VAR. | MATL CODE / MATL SPCN. | UNIT | UNIT WT. / QTY | ZONE |
|---|---|---|---|---|---|---|---|---|---|---|---|
| — | — | — | 050 | COPPER WASHER 15 ID X 26 OD | 3 | — | — | BP9003531480 | — | 0.004 / 001 | |
| — | — | — | 049 | PLUG | — | 4 203 02 00 033 | — | — | NO | 0.050 / 001 | |
| — | — | — | 048 | THROTTLE PLATE | — | 4 203 02 44 012 | — | — | NO | 0.080 / 001 | |
| — | — | — | 047 | SCRU GRB SOC AP M10 X 12 | 1 | — | — | BP712.5110.045 / AA7125110 | NO | 0.004 / 001 | |
| — | — | — | 046 | THROTTLE BODY | — | 3 203 02 106 09 | — | — | NO | 4.020 / 001 | |
| WT STOCK | — | — | 045 | COPPER WASHER P 1 | 3 | — | — | BP9003531520 | NO | 0.010 / 001 | |
| — | — | — | 044 | CONNECTING PIPE | — | 4 203 02 44 014 | — | — | — | 0.400 / 001 | |
| — | — | — | 043 | BOLT HEX. HD. A M 12 X 65 | 1 | — | — | AA7111122216 / AA711122 | NO | 0.072 / 004 | |
| — | — | — | 042 | PIPE | — | 4 203 02 92 001 | — | — | NO | 0.300 / 001 | |
| — | — | — | 041 | NIPPLE | — | 4 203 02 00 022 | — | — | NO | 0.060 / 002 | |
| — | — | — | 040 | UNION NUT | — | 4 203 02 00 023 | — | — | NO | 0.100 / 002 | |
| — | — | — | 039 | NUT M 30 | 3 | — | — | BP9003532560 | — | 1.980 / 006 | |
| — | — | — | 038 | C DS TUBE O/D 26.9 X 4TK X 120 LG. | — | — | — | AA1041046448 / AA10446 | NO | 0.264 / 002 | |
| — | — | — | 037 | 20 NB GLOBE VALVE FEMALE ENDS 3/4 | 3 | — | — | BP 9003530690 | NO | 2.000 / 002 | |
| — | — | — | 036 | MALE STUD COUPLING 2027 P | 3 | — | — | BP3003530960 | NO | 0.900 / 002 | |
| — | — | — | 035 | CUP SEAL OD 160 ID 130 | — | H T 0003 | 067 | — | NO | 0.011 / 002 | |
| — | — | — | 034 | SEAL COVER | — | 3 203 02 00 004 | — | — | NO | 6.300 / 001 | |
| — | — | — | 033 | TAPER DOWEL | — | 4 203 02 00 032 | — | — | NO | 0.040 / 002 | |
| — | — | — | 032 | PACKING | — | 4 203 02 00 007 | — | — | NO | 0.060 / 001 | |
| — | — | — | 031 | BUSH | — | 4 203 02 00 005 | — | — | NO | 1.600 / 001 | |
| — | — | — | 030 | PISTON COVER | — | 2 203 02 107 04 | — | — | NO | 26.210 / 001 | |
| — | — | — | 029 | BUSH | — | 3 203 02 00 002 | — | — | NO | 1.280 / 001 | |
| — | — | — | 028 | PISTON RING | — | 3 203 02 00 001 | — | — | NO | 0.700 / 002 | |
| — | — | — | 027 | PIN | — | 4 203 02 00 003 | — | — | NO | 5.400 / 001 | |
| — | — | — | 026 | BUSH SLEEVE | — | 4 203 02 00 004 | — | — | NO | 1.300 / 001 | |
| — | — | — | 025 | PISTON | — | 1 203 03 107 01 | — | — | NO | 70.000 / 001 | |
| — | — | — | 024 | STUD M 16 X 45 LG. | — | 4 203 02 32 002. | 002 | — | NO | 0.110 / 024 | |
| — | — | — | 023 | NUT HEX AM 16 | 3 | — | — | AA7151115059 / AA7151115 | NO | 0.030 / 024 | |
| — | — | — | 022 | WASHER | — | 4 203 02 00 027 | — | — | NO | 0.005 / 012 | |
| — | — | — | 021 | CYLINDER | — | 0 203 02 107 02 | — | — | NO | 195.00 / 001 | |
| — | — | — | 020 | COVER | — | 2 203 02 107 03 | — | — | NO | 52.00 / 001 | |
| — | — | — | 019 | STUD M 24 X 55 LG. | — | 4 203 02 92 002 | 001 | — | NO | 0.320 / 024 | |
| WT STOCK | — | — | 018 | NUT HEX M 24 | 3 | — | — | BP9003532490 | — | 0.110 / 024 | |
| WT STOCK | — | — | 017 | RUBBER CORD NOM DIA 8 X 2300 LG. | 3 | — | — | AA5984407086 | NO | 0.300 / 001 | |
| — | — | — | 016 | CONNECTING ROD | — | 2 203 02 107 02 | — | — | NO | 4.600 / 001 | |
| — | — | — | 015 | BUSH | — | 3 203 02 107 05 | — | — | NO | 1.550 / 001 | |
| — | — | — | 014 | NUT M 90 X 4 LHTHDS | — | 4 203 02 00 016 | — | — | NO | 6.300 / 001 | |
| — | — | — | 013 | TURN BUCKLE | — | 3 203 02 00 006 | — | — | — | 11.900 / 001 | |
| — | — | — | 012 | NUT M 90 X 4 RH THDS | — | 4 203 02 00 015 | — | — | NO | 6.300 / 001 | |
| — | — | — | 011 | PISTON ROD | — | 3 203 02 107 03 | — | — | NO | 50.00 / 001 | |
| — | — | — | 010 | SLEEVE | — | 2 203 02 107 01 | — | — | NO | 44.00 / 001 | |
| STD DRG. | — | — | 009 | STUD A M 12 X 40 LG | — | 3 203 29 49 073 | 004 | — | NO | 0.050 / 004 | |
| — | — | — | 008 | WASHER SPRING SC A 12-ST | 1 | — | — | AA7164001987 / AA7164001 | NO | 0.004 / 004 | |
| WT STOCK | — | — | 007 | NUT HEX A M 12 | 1 | — | — | AA7151115040 / AA7151115 | NO | 0.017 / 004 | |
| FOR JACKING WT STOCK | — | — | 006 | SCRU HEX P M 16 X 50 LG. | 1 | — | — | AA7121123533 / AA7121123 | NO | 0.108 / 002 | |
| — | — | — | 005 | CYLINDER COVER | — | 2 203 02 38 001 | — | — | NO | 32.000 / 001 | |
| — | — | — | 004 | AIR RELEASE PLUG EXT 3/8 PL | — | 4 203 02 107 04 | — | — | NO | 1.00 / 002 | |
| — | — | — | 003 | COPPER WASHER 18 I/D X 24 OD X 2 TK | 3 | — | — | BP9003531490 | NO | 0.010 / 005 | |
| — | — | — | 002 | SCRU GRB SOC AP M 6 X 12 | 2 | — | — | BP7125110931 | NO | 0.300 / 004 | |
| — | — | — | 001 | RUBBER CORD NOM DIA 4 X 1500 LG. | 1 | — | — | AA5984407043 | NO | 0.100 / 001 | |

CARD TYPE-3 — CARD TYPE-1 — CARD TYPE-2

ADDITIONAL INFORMATION

STATUS OF DRAWING: U

DISTRIBUTION OF PRINTS: HTE-2, WTM-5, FBM-7, THX-1

TYPE OF PRODUCT OR NAME OF CUSTOMER / PROJECT: KOPILI EXTENSION

BHARAT HEAVY ELECTRICALS LTD. BHOPAL

| | NAME | SIGN | DATE |
|---|---|---|---|
| DRN. | D.C. DIXIT | | 15.1.93 |
| CHD. | S.NIGAM KUMAR | | 18/1/93 |
| APPD. | A.K. AGARWAL | | 23/6/93 |

DEPT. CODE: HTE 402 — GRADE OF UNITOL DIM X(M): — SCALE: 1:2·5 — WEIGHT (Kg): 575·00 — REF. TO ASSY. DRG.: — — ITEM NO.: — — NO. OF ITEMS: 064

TITLE: G.V. SERVO WITHOUT STOPPER R.H.

CARD CODE — DRAWING NO. 0 203 03 107 01 — REV. 03 — SHEET NO. — NO. OF SHEETS 01

| REV. | DATE | ALT/CHD | REMARKS |
|---|---|---|---|
| 03 | 19.9.95 | APP. | IT. 047 M10 x 12 WAS M8 x 12 |
| 02 | 11.9.93 | APP. | REV 01 APPROVED |
| 01 | 10.8.93 | APPD. — SEE REV 02 | IN BOM IT 46 DRG NO. 3203 02 106 09 WAS 3203 02 44 013 IT. 47 SCRGGR M8 WASH12 |

SIZE A0

THE INFORMATION ON THIS DOCUMENT IS THE PROPERTY OF BHARAT HEAVY ELECTRICALS LIMITED. IT MUST NOT BE USED DIRECTLY OR INDIRECTLY IN ANY WAY DETRIMENTAL TO THE INTEREST OF THE COMPANY.

*Inspection Report:*
Inspection frequency: Monthly
Period: 01st January 2009 to 01st April 2009

| Date | Area Identified | Noise level reading (db) | Reading Interval |
|---|---|---|---|
| Jan | Turbine pit Unit I | 109.0-110.2 | Weekly |
| | Turbine pit Unit II | 91.5-94.1 | Weekly |
| | Turbine pit Unit III | 107.4-110.1 | Weekly |
| | Turbine pit Unit IV | 105.4-108.6 | Weekly |
| | Generator Floor | 87.3-92.1 | Weekly |
| | Machine floor | 90.8-95.2 | Weekly |
| | Control Room | 71.0-80.8 | Weekly |
| | D.G Set | Not Run | Weekly |
| Feb | Turbine pit Unit I | 81.0-109.3 | Weekly |
| | Turbine pit Unit II | 84.1-92.7 | Weekly |
| | Turbine pit Unit III | 91.4-110.3 | Weekly |
| | Turbine pit Unit IV | 107.9-113.9 | Weekly |
| | Generator Floor | 74.8-95.2 | Weekly |
| | Machine floor | 87.4-93.7 | Weekly |
| | Control Room | 73.3-82.6 | Weekly |
| | D.G Set | Not run | Weekly |
| Mar | Turbine pit Unit I | 88.0-113.5 | Weekly |
| | Turbine pit Unit II | 91.7-109.5 | Weekly |
| | Turbine pit Unit III | 88.2-115.7 | Weekly |
| | Turbine pit Unit IV | 87.5-112.8 | Weekly |
| | Generator Floor | 84.6-108.7 | Weekly |
| | Machine floor | 79.5-110.3 | Weekly |
| | Control Room | 71.7-83.5 | Weekly |
| | D.G Set | Not run | Weekly |
| Apr | Turbine pit Unit I | 80.2-108.2 | Weekly |
| | Turbine pit Unit II | 85.1-93.2 | Weekly |
| | Turbine pit Unit III | 81.3-105.7 | Weekly |
| | Turbine pit Unit IV | 74.9-106.1 | Weekly |
| | Generator Floor | 78.2-89.7 | Weekly |
| | Machine floor | 90.8-95.5 | Weekly |
| | Control Room | 68.7-77.2 | Weekly |
| | D.G Set | Not run | Weekly |

*Inspection Report:*
Inspection frequency: Monthly
Period: 01st May 2009 to 22nd August 2009

| Date | Area Identified | Noise level reading (db) | Reading Interval |
|---|---|---|---|
| May | Turbine pit Unit I | 90.1-109.2 | Weekly |
| | Turbine pit Unit II | 87.5-104.5 | Weekly |
| | Turbine pit Unit III | 87.7-93.9 | Weekly |
| | Turbine pit Unit IV | 106.3-108.4 | Weekly |
| | Generator Floor | 86.9-89.5 | Weekly |
| | Machine floor | 91.3-93.2 | Weekly |
| | Control Room | 73.3-76.2 | Weekly |
| | D.G Set | Not Run | Weekly |
| Jun | Turbine pit Unit I | 90.6-109.0 | Weekly |
| | Turbine pit Unit II | 105.2-107.3 | Weekly |
| | Turbine pit Unit III | 87.7-97.6 | Weekly |
| | Turbine pit Unit IV | 105.1-106.4 | Weekly |
| | Generator Floor | 87.2-95.2 | Weekly |
| | Machine floor | 93.6-97.4 | Weekly |
| | Control Room | 74.1-76.8 | Weekly |
| | D.G Set | Not run | Weekly |
| Jul | Turbine pit Unit I | 80.2-108.8 | Weekly |
| | Turbine pit Unit II | 85.1-107.0 | Weekly |
| | Turbine pit Unit III | 81.3-107.1 | Weekly |
| | Turbine pit Unit IV | 74.9-107.3 | Weekly |
| | Generator Floor | 78.2-90.8 | Weekly |
| | Machine floor | 90.8-96.9 | Weekly |
| | Control Room | 68.7-83.0 | Weekly |
| | D.G Set | Not run | Weekly |
| Aug | Turbine pit Unit I | 106.4-114.0 | Weekly |
| | Turbine pit Unit II | 106.0-112.6 | Weekly |
| | Turbine pit Unit III | 93.4-94.5 | Weekly |
| | Turbine pit Unit IV | 105.2-112.7 | Weekly |
| | Generator Floor | 89.8-92.8 | Weekly |
| | Machine floor | 94.9-96.2 | Weekly |
| | Control Room | 75.1-81.4 | Weekly |
| | D.G Set | | Weekly |

*Inspection Report:*
Inspection frequency: Monthly
Period: September 2009 to December 2009

| Date | Area Identified | Noise level reading (db) | Reading Interval |
|---|---|---|---|
| Sept | Turbine pit Unit I | 81.0-109.3 | Weekly |
| | Turbine pit Unit II | 84.1-92.7 | Weekly |
| | Turbine pit Unit III | 91.4-110.3 | Weekly |
| | Turbine pit Unit IV | 107.9-113.9 | Weekly |
| | Generator Floor | 74.8-95.2 | Weekly |
| | Machine floor | 87.4-93.7 | Weekly |
| | Control Room | 73.3-82.6 | Weekly |
| | D.G Set | Not run | Weekly |
| Oct | Turbine pit Unit I | 90.6-109.0 | Weekly |
| | Turbine pit Unit II | 105.2-107.3 | Weekly |
| | Turbine pit Unit III | 87.7-97.6 | Weekly |
| | Turbine pit Unit IV | 105.1-106.4 | Weekly |
| | Generator Floor | 87.2-95.2 | Weekly |
| | Machine floor | 93.6-97.4 | Weekly |
| | Control Room | 74.1-76.8 | Weekly |
| | D.G Set | Not run | Weekly |
| Nov | Turbine pit Unit I | 80.2-108.8 | Weekly |
| | Turbine pit Unit II | 85.1-107.0 | Weekly |
| | Turbine pit Unit III | 81.3-107.1 | Weekly |
| | Turbine pit Unit IV | 74.9-107.3 | Weekly |
| | Generator Floor | 78.2-90.8 | Weekly |
| | Machine floor | 90.8-96.9 | Weekly |
| | Control Room | 68.7-83.0 | Weekly |
| | D.G Set | Not run | Weekly |
| Dec | Turbine pit Unit I | 88.0-113.5 | Weekly |
| | Turbine pit Unit II | 91.7-109.5 | Weekly |
| | Turbine pit Unit III | 88.2-115.7 | Weekly |
| | Turbine pit Unit IV | 87.5-112.8 | Weekly |
| | Generator Floor | 84.6-108.7 | Weekly |
| | Machine floor | 79.5-110.3 | Weekly |
| | Control Room | 71.7-83.5 | Weekly |
| | D.G Set | Not run | Weekly |

*Inspection Report:*
Inspection frequency: Monthly
Period: 01st January 2010 to 31st March 2010

| Date | Area Identified | Noise level reading (db) | Reading Interval |
|---|---|---|---|
| Jan | Turbine pit Unit I | | Weekly |
| | Turbine pit Unit II | 91.5-94.1 | Weekly |
| | Turbine pit Unit III | 107.4-110.1 | Weekly |
| | Turbine pit Unit IV | 105.4-108.6 | Weekly |
| | Generator Floor | 87.3-92.1 | Weekly |
| | Machine floor | 90.8-95.2 | Weekly |
| | Control Room | 71.0-80.8 | Weekly |
| | D.G Set | Not Run | Weekly |
| Feb | Turbine pit Unit I | | Weekly |
| | Turbine pit Unit II | 84.1-92.7 | Weekly |
| | Turbine pit Unit III | 91.4-110.3 | Weekly |
| | Turbine pit Unit IV | 107.9-113.9 | Weekly |
| | Generator Floor | 74.8-95.2 | Weekly |
| | Machine floor | 87.4-93.7 | Weekly |
| | Control Room | 73.3-82.6 | Weekly |
| | D.G Set | Not run | Weekly |
| Mar | Turbine pit Unit I | | Weekly |
| | Turbine pit Unit II | 91.7-109.5 | Weekly |
| | Turbine pit Unit III | 88.2-115.7 | Weekly |
| | Turbine pit Unit IV | 87.5-112.8 | Weekly |
| | Generator Floor | 84.6-108.7 | Weekly |
| | Machine floor | 79.5-110.3 | Weekly |
| | Control Room | 71.7-83.5 | Weekly |
| | D.G Set | Not run | Weekly |

*Inspection Report:*
Inspection frequency: Monthly
Period: 01st May 2010 to 30th June 2010

| Date | Area Identified | Noise level reading (db) | Reading Interval |
|---|---|---|---|
| Apr | Turbine pit Unit I | | Weekly |
| | Turbine pit Unit II | 87.5-104.5 | Weekly |
| | Turbine pit Unit III | 87.7-93.9 | Weekly |
| | Turbine pit Unit IV | 106.3-108.4 | Weekly |
| | Generator Floor | 86.9-89.5 | Weekly |
| | Machine floor | 91.3-93.2 | Weekly |
| | Control Room | 73.3-76.2 | Weekly |
| | D.G Set | Not Run | Weekly |
| May | Turbine pit Unit I | | Weekly |
| | Turbine pit Unit II | 105.2-107.3 | Weekly |
| | Turbine pit Unit III | 87.7-97.6 | Weekly |
| | Turbine pit Unit IV | 105.1-106.4 | Weekly |
| | Generator Floor | 87.2-95.2 | Weekly |
| | Machine floor | 93.6-97.4 | Weekly |
| | Control Room | 74.1-76.8 | Weekly |
| | D.G Set | Not run | Weekly |
| Jun | Turbine pit Unit I | | Weekly |
| | Turbine pit Unit II | 85.1-107.0 | Weekly |
| | Turbine pit Unit III | 81.3-107.1 | Weekly |
| | Turbine pit Unit IV | 74.9-107.3 | Weekly |
| | Generator Floor | 78.2-90.8 | Weekly |
| | Machine floor | 90.8-96.9 | Weekly |
| | Control Room | 68.7-83.0 | Weekly |
| | D.G Set | Not run | Weekly |

*Inspection Report:*
Inspection frequency: Monthly
Period: July 2010 to Sept 2010

| Date | Area Identified | Noise level reading (db) | Reading Interval |
|---|---|---|---|
| July | Turbine pit Unit I | 90.6-109.0 | Weekly |
| | Turbine pit Unit II | | Weekly |
| | Turbine pit Unit III | 87.7-97.6 | Weekly |
| | Turbine pit Unit IV | 105.1-106.4 | Weekly |
| | Generator Floor | 87.2-95.2 | Weekly |
| | Machine floor | 93.6-97.4 | Weekly |
| | Control Room | 74.1-76.8 | Weekly |
| | D.G Set | 87.7-97.6 | Weekly |
| Aug | Turbine pit Unit I | 80.2-108.8 | Weekly |
| | Turbine pit Unit II | | Weekly |
| | Turbine pit Unit III | 81.3-107.1 | Weekly |

| | | | |
|---|---|---|---|
| | Turbine pit Unit IV | 74.9-107.3 | Weekly |
| | Generator Floor | 78.2-90.8 | Weekly |
| | Machine floor | 90.8-96.9 | Weekly |
| | Control Room | 68.7-83.0 | Weekly |
| | D.G Set | 84.6-108.7 | Weekly |
| Sept | Turbine pit Unit I | 88.0-113.5 | Weekly |
| | Turbine pit Unit II | | Weekly |
| | Turbine pit Unit III | 88.2-115.7 | Weekly |
| | Turbine pit Unit IV | 87.5-112.8 | Weekly |
| | Generator Floor | 84.6-108.7 | Weekly |
| | Machine floor | 79.5-110.3 | Weekly |
| | Control Room | 71.7-83.5 | Weekly |
| | D.G Set | 81.3-107.1 | Weekly |

*Inspection Report:*
Inspection frequency: Monthly
Period: Oct 2010 to Dec 2010

| Date | Area Identified | Noise level reading (db) | Reading Interval |
|---|---|---|---|
| Oct | Turbine pit Unit I | 88.0-113.5 | Weekly |
| | Turbine pit Unit II | | Weekly |
| | Turbine pit Unit III | 88.2-115.7 | Weekly |
| | Turbine pit Unit IV | 87.5-112.8 | Weekly |
| | Generator Floor | 84.6-108.7 | Weekly |
| | Machine floor | 79.5-110.3 | Weekly |
| | Control Room | 71.7-83.5 | Weekly |
| | D.G Set | 81.3-107.1 | Weekly |
| Nov | Turbine pit Unit I | 90.6-109.0 | Weekly |
| | Turbine pit Unit II | | Weekly |
| | Turbine pit Unit III | 87.7-97.6 | Weekly |
| | Turbine pit Unit IV | 105.1-106.4 | Weekly |
| | Generator Floor | 87.2-95.2 | Weekly |
| | Machine floor | 93.6-97.4 | Weekly |
| | Control Room | 74.1-76.8 | Weekly |
| | D.G Set | 87.7-97.6 | Weekly |
| Dec | Turbine pit Unit I | 80.2-108.8 | Weekly |
| | Turbine pit Unit II | 85.1-107.0 | Weekly |
| | Turbine pit Unit III | 81.3-107.1 | Weekly |
| | Turbine pit Unit IV | 74.9-107.3 | Weekly |
| | Generator Floor | 78.2-90.8 | Weekly |
| | Machine floor | 90.8-96.9 | Weekly |
| | Control Room | 68.7-83.0 | Weekly |
| | D.G Set | 84.6-108.7 | Weekly |

*Inspection Report:*
Inspection frequency: Monthly
Period: Jan 2011 to Mar 2011

| Date | Area Identified | Noise level reading (db) | Reading Interval |
|---|---|---|---|
| Jan | Turbine pit Unit I | | Weekly |
| | Turbine pit Unit II | 91.5-94.1 | Weekly |
| | Turbine pit Unit III | 107.4-110.1 | Weekly |
| | Turbine pit Unit IV | 105.4-108.6 | Weekly |
| | Generator Floor | 87.3-92.1 | Weekly |
| | Machine floor | 90.8-95.2 | Weekly |
| | Control Room | 71.0-80.8 | Weekly |
| | D.G Set | 78.2-90.8 | Weekly |
| Feb | Turbine pit Unit I | | Weekly |
| | Turbine pit Unit II | 105.2-107.3 | Weekly |
| | Turbine pit Unit III | 87.7-97.6 | Weekly |
| | Turbine pit Unit IV | 105.1-106.4 | Weekly |
| | Generator Floor | 87.2-95.2 | Weekly |
| | Machine floor | 93.6-97.4 | Weekly |
| | Control Room | 74.1-76.8 | Weekly |
| | D.G Set | 90.6-109.0 | Weekly |
| Mar | Turbine pit Unit I | | Weekly |
| | Turbine pit Unit II | 85.1-107.0 | Weekly |
| | Turbine pit Unit III | 81.3-107.1 | Weekly |
| | Turbine pit Unit IV | 74.9-107.3 | Weekly |
| | Generator Floor | 78.2-90.8 | Weekly |
| | Machine floor | 90.8-96.9 | Weekly |
| | Control Room | 68.7-83.0 | Weekly |
| | D.G Set | 80.2-108.8 | Weekly |

*Inspection Report:*
Inspection frequency: Monthly
Period: Apr 2011 to Jun 2011

| Date | Area Identified | Noise level reading (db) | Reading Interval |
|---|---|---|---|
| Apr | Turbine pit Unit I | 101.2-111.5 | Weekly |
| | Turbine pit Unit II | 102.3-110.5 | Weekly |
| | Turbine pit Unit III | 107.6-111.1 | Weekly |
| | Turbine pit Unit IV | 106.4-107.5 | Weekly |
| | Generator Floor | 86.5-93.1 | Weekly |
| | Machine floor | 89.8-94.2 | Weekly |
| | Control Room | 70.0-79.6 | Weekly |
| | D.G Set | 87.2-95.8 | Weekly |
| May | Turbine pit Unit I | 103.5-110.7 | Weekly |
| | Turbine pit Unit II | 101.2-109.5 | Weekly |

| | | | |
|---|---|---|---|
| | Turbine pit Unit III | 106.7-107.6 | Weekly |
| | Turbine pit Unit IV | 103.2-108.6 | Weekly |
| | Generator Floor | 87.2-95.2 | Weekly |
| | Machine floor | 95.6-98.4 | Weekly |
| | Control Room | 73.1-78.8 | Weekly |
| | D.G Set | 88.6-105.0 | Weekly |
| Jun | Turbine pit Unit I | 105.6-110.5 | Weekly |
| | Turbine pit Unit II | 105.1-107.0 | Weekly |
| | Turbine pit Unit III | 101.3-107.1 | Weekly |
| | Turbine pit Unit IV | 104.9-107.3 | Weekly |
| | Generator Floor | 88.2-90.8 | Weekly |
| | Machine floor | 90.8-96.9 | Weekly |
| | Control Room | 88.7-83.0 | Weekly |
| | D.G Set | 80.2-98.8 | Weekly |

*Inspection Report:*
Inspection frequency: Monthly
Period: Jul 2011 to Sep 2011

| Date | Area Identified | Noise level reading (db) | Reading Interval |
|---|---|---|---|
| Jul | Turbine pit Unit I | 101.2-111.5 | Weekly |
| | Turbine pit Unit II | 105.6-110.5 | Weekly |
| | Turbine pit Unit III | 104.9-107.3 | Weekly |
| | Turbine pit Unit IV | 103.5-110.7 | Weekly |
| | Generator Floor | 88.0-95.6 | Weekly |
| | Machine floor | 95.6-98.4 | Weekly |
| | Control Room | 73.1-78.8 | Weekly |
| | D.G Set | 83.3-97.5 | Weekly |
| Aug | Turbine pit Unit I | 102.3-110.5 | Weekly |
| | Turbine pit Unit II | 103.2-108.6 | Weekly |
| | Turbine pit Unit III | 101.3-107.1 | Weekly |
| | Turbine pit Unit IV | 106.7-107.6 | Weekly |
| | Generator Floor | 88.7-83.0 | Weekly |
| | Machine floor | 90.8-96.9 | Weekly |
| | Control Room | 86.5-93.1 | Weekly |
| | D.G Set | 85.6-99.4 | Weekly |
| Sep | Turbine pit Unit I | 107.6-111.1 | Weekly |
| | Turbine pit Unit II | 101.2-109.5 | Weekly |
| | Turbine pit Unit III | 105.1-107.0 | Weekly |
| | Turbine pit Unit IV | 106.4-107.5 | Weekly |
| | Generator Floor | 89.8-94.2 | Weekly |
| | Machine floor | 88.2-90.8 | Weekly |
| | Control Room | 71.2-75.2 | Weekly |
| | D.G Set | 84.6-97.6 | Weekly |

*Inspection Report:*
Inspection frequency: Monthly
Period: Oct 2011 to Dec 2011

| Date | Area Identified | Noise level reading (db) | Reading Interval |
|---|---|---|---|
| Oct | Turbine pit Unit I | 103.0-111.2 | Weekly |
| | Turbine pit Unit II | 105.3-110.5 | Weekly |
| | Turbine pit Unit III | 102.7-109.8 | Weekly |
| | Turbine pit Unit IV | 104.5-109.6 | Weekly |
| | Generator Floor | 88.9-92.6 | Weekly |
| | Machine floor | 90.6-100.5 | Weekly |
| | Control Room | 85.6-95.1 | Weekly |
| | D.G Set | 88.4-92.3 | Weekly |
| Nov | Turbine pit Unit I | 103.8-110.8 | Weekly |
| | Turbine pit Unit II | 104.6-110.8 | Weekly |
| | Turbine pit Unit III | 104.2-109.7 | Weekly |
| | Turbine pit Unit IV | 103.6-110.8 | Weekly |
| | Generator Floor | 87.6-92.4 | Weekly |
| | Machine floor | 90.1-109.9 | Weekly |
| | Control Room | 88.2-92.5 | Weekly |
| | D.G Set | 78.4-86.4 | Weekly |
| Dec | Turbine pit Unit I | 102.8-110.7 | Weekly |
| | Turbine pit Unit II | 103.5-110.8 | Weekly |
| | Turbine pit Unit III | | Weekly |
| | Turbine pit Unit IV | 103.5-111.3 | Weekly |
| | Generator Floor | 88.4-93.7 | Weekly |
| | Machine floor | 92.0-98.4 | Weekly |
| | Control Room | 89.5-93.2 | Weekly |
| | D.G Set | 79.5-88.6 | Weekly |

*Inspection Report:*
Inspection frequency: Monthly
Period: Jan 2012 to Mar 2012

| Date | Area Identified | Noise level reading (db) | Reading Interval |
|---|---|---|---|
| Jan | Turbine pit Unit I | 101.2-108.5 | Weekly |
| | Turbine pit Unit II | 101.0-106.1 | Weekly |
| | Turbine pit Unit III | | Weekly |
| | Turbine pit Unit IV | 102.3-106.8 | Weekly |
| | Generator Floor | 90.0-93.1 | Weekly |
| | Machine floor | 90.8-92.3 | Weekly |
| | Control Room | 69.0-78.0 | Weekly |
| | D.G Set | 76.2-91.8 | Weekly |
| Feb | Turbine pit Unit I | 102.8-107.2 | Weekly |
| | Turbine pit Unit II | 102.8-107.3 | Weekly |

| | | | |
|---|---|---|---|
| | Turbine pit Unit III | | Weekly |
| | Turbine pit Unit IV | 102.2-106.4 | Weekly |
| | Generator Floor | 90.2-95.2 | Weekly |
| | Machine floor | 90.6-96.4 | Weekly |
| | Control Room | 72.2-77.8 | Weekly |
| | D.G Set | 90.6-101.0 | Weekly |
| Mar | Turbine pit Unit I | 101.6-106.3 | Weekly |
| | Turbine pit Unit II | 101.1-107.0 | Weekly |
| | Turbine pit Unit III | | Weekly |
| | Turbine pit Unit IV | 101.9-107.6 | Weekly |
| | Generator Floor | 88.2-90.8 | Weekly |
| | Machine floor | 92.8-96.9 | Weekly |
| | Control Room | 68.7-83.0 | Weekly |
| | D.G Set | 81.3-102.8 | Weekly |

*Inspection Report:*
Inspection frequency: Monthly
Period: Apr 2012 to Jun 2012

| Date | Area Identified | Noise level reading (db) | Reading Interval |
|---|---|---|---|
| Apr | Turbine pit Unit I | 102.9-110.6 | Weekly |
| | Turbine pit Unit II | 102.3-110.5 | Weekly |
| | Turbine pit Unit III | | Weekly |
| | Turbine pit Unit IV | 106.4-107.5 | Weekly |
| | Generator Floor | 86.5-93.1 | Weekly |
| | Machine floor | 89.8-94.2 | Weekly |
| | Control Room | 70.0-79.6 | Weekly |
| | D.G Set | 87.2-95.8 | Weekly |
| May | Turbine pit Unit I | 107.6-111.1 | Weekly |
| | Turbine pit Unit II | 101.2-109.5 | Weekly |
| | Turbine pit Unit III | | Weekly |
| | Turbine pit Unit IV | 106.4-107.5 | Weekly |
| | Generator Floor | 89.8-94.2 | Weekly |
| | Machine floor | 88.2-90.8 | Weekly |
| | Control Room | 71.2-75.2 | Weekly |
| | D.G Set | 84.6-97.6 | Weekly |
| Jun | Turbine pit Unit I | 105.6-110.5 | Weekly |
| | Turbine pit Unit II | 105.1-107.0 | Weekly |
| | Turbine pit Unit III | | Weekly |
| | Turbine pit Unit IV | 104.9-107.3 | Weekly |
| | Generator Floor | 88.2-90.8 | Weekly |
| | Machine floor | 90.8-96.9 | Weekly |
| | Control Room | 88.7-83.0 | Weekly |
| | D.G Set | 80.2-98.8 | Weekly |

*Inspection Report:*
Inspection frequency: Monthly
Period: Jul 2012 to Sep 2012

| Date | Area Identified | Noise level reading (db) | Reading Interval |
|---|---|---|---|
| Jul | Turbine pit Unit I | | Weekly |
| | Turbine pit Unit II | | Weekly |
| | Turbine pit Unit III | 100.9-105.3 | Weekly |
| | Turbine pit Unit IV | 101.5-109.4 | Weekly |
| | Generator Floor | 91.0-94.6 | Weekly |
| | Machine floor | 96.6-99.2 | Weekly |
| | Control Room | 77.1-81.2 | Weekly |
| | D.G Set | 92.3-97.5 | Weekly |
| Aug | Turbine pit Unit I | 102.3-110.5 | Weekly |
| | Turbine pit Unit II | | Weekly |
| | Turbine pit Unit III | 101.8-106.1 | Weekly |
| | Turbine pit Unit IV | 105.7-106.6 | Weekly |
| | Generator Floor | 91.7-93.0 | Weekly |
| | Machine floor | 92.8-96.9 | Weekly |
| | Control Room | 84.5-92.1 | Weekly |
| | D.G Set | 85.6-97.4 | Weekly |
| Sep | Turbine pit Unit I | 104.6-106.4 | Weekly |
| | Turbine pit Unit II | | Weekly |
| | Turbine pit Unit III | 104.1-106.2 | Weekly |
| | Turbine pit Unit IV | 104.4-105.8 | Weekly |
| | Generator Floor | 89.8-93.7 | Weekly |
| | Machine floor | 88.2-90.8 | Weekly |
| | Control Room | 88.2-92.2 | Weekly |
| | D.G Set | 84.6-95.6 | Weekly |

*Inspection Report:*
Inspection frequency: Monthly
Period: Oct 2012 to Dec 2012

| Date | Area Identified | Noise level reading (db) | Reading Interval |
|---|---|---|---|
| Oct | Turbine pit Unit I | 102.0-109.2 | Weekly |
| | Turbine pit Unit II | | Weekly |
| | Turbine pit Unit III | 104.2-108.8 | Weekly |
| | Turbine pit Unit IV | 104.5-109.6 | Weekly |
| | Generator Floor | 89.9-92.8 | Weekly |
| | Machine floor | 91.6-96.5 | Weekly |
| | Control Room | 83.6-94.1 | Weekly |
| | D.G Set | 88.4-92.3 | Weekly |
| Nov | Turbine pit Unit I | 101.8-108.8 | Weekly |

| | | | |
|---|---|---|---|
| | Turbine pit Unit II | | Weekly |
| | Turbine pit Unit III | 102.2-107.7 | Weekly |
| | Turbine pit Unit IV | 101.6-110.5 | Weekly |
| | Generator Floor | 88.6-91.6 | Weekly |
| | Machine floor | 90.1-104.9 | Weekly |
| | Control Room | 90.2-94.5 | Weekly |
| | D.G Set | 88.4-96.4 | Weekly |
| Dec | Turbine pit Unit I | 102.1-110.7 | Weekly |
| | Turbine pit Unit II | 103.5-110.4 | Weekly |
| | Turbine pit Unit III | 104.1-110.8 | Weekly |
| | Turbine pit Unit IV | 102.5-111.3 | Weekly |
| | Generator Floor | 88.4-91.8 | Weekly |
| | Machine floor | 90.0-98.4 | Weekly |
| | Control Room | 88.5-93.2 | Weekly |
| | D.G Set | 89.5-98.6 | Weekly |

*Inspection Report:*
Inspection frequency: Monthly
Period: April 2013 to June 2013

| Date | Area Identified | Noise level reading (db) | Reading Interval |
|---|---|---|---|
| Apr | Turbine pit Unit I | 103.2 | Weekly |
| | Turbine pit Unit II | 104.5 | Weekly |
| | Turbine pit Unit III | 86.5 | Weekly |
| | Turbine pit Unit IV | 85.9 | Weekly |
| | Generator Floor | 79.9 | Weekly |
| | Machine floor | 86.4 | Weekly |
| | Control Room | 68.1 | Weekly |
| | D.G Set | 98.5 | Weekly |
| May | Turbine pit Unit I | 103.8 | Weekly |
| | Turbine pit Unit II | 84.5 | Weekly |
| | Turbine pit Unit III | 85.2 | Weekly |
| | Turbine pit Unit IV | 84.8 | Weekly |
| | Generator Floor | 80.1 | Weekly |
| | Machine floor | 85.7 | Weekly |
| | Control Room | 70.4 | Weekly |
| | D.G Set | 98.6 | Weekly |
| Jun | Turbine pit Unit I | 86.8 | Weekly |
| | Turbine pit Unit II | 85.5 | Weekly |
| | Turbine pit Unit III | 103.1 | Weekly |
| | Turbine pit Unit IV | 84.6 | Weekly |
| | Generator Floor | 81.0 | Weekly |
| | Machine floor | 84.1 | Weekly |
| | Control Room | 70.2 | Weekly |
| | D.G Set | 97.6 | Weekly |

*Inspection Report:*
Inspection frequency: Monthly
Period: July 2013 to September 2013

| Date | Area Identified | Noise level reading (db) | Reading Interval |
|---|---|---|---|
| Jul | Turbine pit Unit I | 101.2 | Weekly |
| | Turbine pit Unit II | 101.5 | Weekly |
| | Turbine pit Unit III | 100.5 | Weekly |
| | Turbine pit Unit IV | 100.9 | Weekly |
| | Generator Floor | 79.9 | Weekly |
| | Machine floor | 86.4 | Weekly |
| | Control Room | 68.1 | Weekly |
| | D.G Set | 98.5 | Weekly |
| Aug | Turbine pit Unit I | 101.8 | Weekly |
| | Turbine pit Unit II | 101.5 | Weekly |
| | Turbine pit Unit III | 101.2 | Weekly |
| | Turbine pit Unit IV | 100.8 | Weekly |
| | Generator Floor | 80.1 | Weekly |
| | Machine floor | 85.7 | Weekly |
| | Control Room | 70.4 | Weekly |
| | D.G Set | 98.6 | Weekly |
| Sep | Turbine pit Unit I | 101.8 | Weekly |
| | Turbine pit Unit II | 100.5 | Weekly |
| | Turbine pit Unit III | 101.1 | Weekly |
| | Turbine pit Unit IV | 100.6 | Weekly |
| | Generator Floor | 81.0 | Weekly |
| | Machine floor | 84.1 | Weekly |
| | Control Room | 70.2 | Weekly |
| | D.G Set | 97.6 | Weekly |

*Inspection Report:*
Inspection frequency: Monthly
Period: September 2013 to December 2013

| Date | Area Identified | Noise level reading (db) | Reading Interval |
|---|---|---|---|
| Oct | Turbine pit Unit I | 101.1 | Weekly |
| | Turbine pit Unit II | 102.4 | Weekly |
| | Turbine pit Unit III | 100.2 | Weekly |
| | Turbine pit Unit IV | 101.6 | Weekly |
| | Generator Floor | 81.5 | Weekly |
| | Machine floor | 88.1 | Weekly |
| | Control Room | 69.5 | Weekly |
| | D.G Set | 100.5 | Weekly |
| Nov | Turbine pit Unit I | 101.9 | Weekly |
| | Turbine pit Unit II | 100.2 | Weekly |

| | | | |
|---|---|---|---|
| | Turbine pit Unit III | 100.9 | Weekly |
| | Turbine pit Unit IV | 101.5 | Weekly |
| | Generator Floor | 80.1 | Weekly |
| | Machine floor | 85.7 | Weekly |
| | Control Room | 71.8 | Weekly |
| | D.G Set | 100.6 | Weekly |
| Dec | Turbine pit Unit I | 100.1 | Weekly |
| | Turbine pit Unit II | 101.8 | Weekly |
| | Turbine pit Unit III | 100.2 | Weekly |
| | Turbine pit Unit IV | 100.3 | Weekly |
| | Generator Floor | 82.6 | Weekly |
| | Machine floor | 85.8 | Weekly |
| | Control Room | 68.8 | Weekly |
| | D.G Set | 99.6 | Weekly |

*Inspection Report:*
Inspection frequency: Monthly
Period: January 2014 to March 2014

| Date | Area Identified | Noise level reading (db) | Reading Interval |
|---|---|---|---|
| Jan | Turbine pit Unit I | 70.8 | Weekly |
| | Turbine pit Unit II | 75.2 | Weekly |
| | Turbine pit Unit III | 101.5 | Weekly |
| | Turbine pit Unit IV | 100.6 | Weekly |
| | Generator Floor | 78.5 | Weekly |
| | Machine floor | 80.1 | Weekly |
| | Control Room | 70.0 | Weekly |
| | D.G Set | 100.5 | Weekly |
| Feb | Turbine pit Unit I | 70.6 | Weekly |
| | Turbine pit Unit II | 75.2 | Weekly |
| | Turbine pit Unit III | 75.2 | Weekly |
| | Turbine pit Unit IV | 75.3 | Weekly |
| | Generator Floor | 74.6 | Weekly |
| | Machine floor | 75.6 | Weekly |
| | Control Room | 71.8 | Weekly |
| | D.G Set | 100.6 | Weekly |
| Mar | Turbine pit Unit I | 70.5 | Weekly |
| | Turbine pit Unit II | 71.2 | Weekly |
| | Turbine pit Unit III | 71.5 | Weekly |
| | Turbine pit Unit IV | 71.8 | Weekly |
| | Generator Floor | 70.9 | Weekly |
| | Machine floor | 70.5 | Weekly |
| | Control Room | 68.8 | Weekly |
| | D.G Set | 99.6 | Weekly |

*Inspection Report:*
Inspection frequency: Monthly
Period: April 2014 to June 2014

| Date | Area Identified | Noise level reading (db) | Reading Interval |
|---|---|---|---|
| Apr | Turbine pit Unit I | 72.8 | Weekly |
| | Turbine pit Unit II | 73.2 | Weekly |
| | Turbine pit Unit III | 75.3 | Weekly |
| | Turbine pit Unit IV | 100.6 | Weekly |
| | Generator Floor | 78.5 | Weekly |
| | Machine floor | 80.1 | Weekly |
| | Control Room | 70.0 | Weekly |
| | D.G Set | Not in opr | Weekly |
| May | Turbine pit Unit I | 70.6 | Weekly |
| | Turbine pit Unit II | 75.2 | Weekly |
| | Turbine pit Unit III | 75.2 | Weekly |
| | Turbine pit Unit IV | 75.3 | Weekly |
| | Generator Floor | 74.6 | Weekly |
| | Machine floor | 75.6 | Weekly |
| | Control Room | 71.8 | Weekly |
| | D.G Set | Not in opr | Weekly |
| Jun | Turbine pit Unit I | 70.5 | Weekly |
| | Turbine pit Unit II | 71.2 | Weekly |
| | Turbine pit Unit III | 71.5 | Weekly |
| | Turbine pit Unit IV | 71.8 | Weekly |
| | Generator Floor | 70.9 | Weekly |
| | Machine floor | 70.5 | Weekly |
| | Control Room | 68.8 | Weekly |
| | D.G Set | Not in opr | Weekly |

*Inspection Report:*
Inspection frequency: Monthly
Period: July 2014 to September 2014

| Date | Area Identified | Noise level reading (db) | Reading Interval |
|---|---|---|---|
| Jul | Turbine pit Unit I | 101.2 | Weekly |
| | Turbine pit Unit II | 81.5 | Weekly |
| | Turbine pit Unit III | 80.5 | Weekly |
| | Turbine pit Unit IV | 100.9 | Weekly |
| | Generator Floor | 81.0 | Weekly |
| | Machine floor | 85.4 | Weekly |
| | Control Room | 70.1 | Weekly |
| | D.G Set | 98.5 | Weekly |
| Aug | Turbine pit Unit I | 101.8 | Weekly |
| | Turbine pit Unit II | 101.5 | Weekly |
| | Turbine pit Unit III | 80.0 | Weekly |

| | | | |
|---|---|---|---|
| | Turbine pit Unit IV | 100.8 | Weekly |
| | Generator Floor | 80.1 | Weekly |
| | Machine floor | 85.7 | Weekly |
| | Control Room | 70.4 | Weekly |
| | D.G Set | 98.6 | Weekly |
| Sep | Turbine pit Unit I | 101.7 | Weekly |
| | Turbine pit Unit II | 100.5 | Weekly |
| | Turbine pit Unit III | 80.2 | Weekly |
| | Turbine pit Unit IV | 100.6 | Weekly |
| | Generator Floor | 81.0 | Weekly |
| | Machine floor | 84.1 | Weekly |
| | Control Room | 72.2 | Weekly |
| | D.G Set | 97.6 | Weekly |

*Inspection Report:*
Inspection frequency: Monthly
Period: September 2014 to December 2014

| Date | Area Identified | Noise level reading (db) | Reading Interval |
|---|---|---|---|
| Oct | Turbine pit Unit I | 101.1 | Weekly |
| | Turbine pit Unit II | 102.4 | Weekly |
| | Turbine pit Unit III | 82.0 | Weekly |
| | Turbine pit Unit IV | 101.6 | Weekly |
| | Generator Floor | 81.5 | Weekly |
| | Machine floor | 88.1 | Weekly |
| | Control Room | 69.5 | Weekly |
| | D.G Set | 100.5 | Weekly |
| Nov | Turbine pit Unit I | 101.9 | Weekly |
| | Turbine pit Unit II | 100.2 | Weekly |
| | Turbine pit Unit III | 99.8 | Weekly |
| | Turbine pit Unit IV | 101.5 | Weekly |
| | Generator Floor | 80.1 | Weekly |
| | Machine floor | 85.7 | Weekly |
| | Control Room | 71.8 | Weekly |
| | D.G Set | 100.6 | Weekly |
| Dec | Turbine pit Unit I | 100.1 | Weekly |
| | Turbine pit Unit II | 101.8 | Weekly |
| | Turbine pit Unit III | 100.2 | Weekly |
| | Turbine pit Unit IV | 100.3 | Weekly |
| | Generator Floor | 82.6 | Weekly |
| | Machine floor | 85.8 | Weekly |
| | Control Room | 68.8 | Weekly |
| | D.G Set | 99.6 | Weekly |